ΟΔΗΓΙΕΣ ΣΥΝΑΡΜΟΛΟΓΗΣΗΣ / ASSEMBLING INSTRUCTIONS / Инструкция за сглобяване

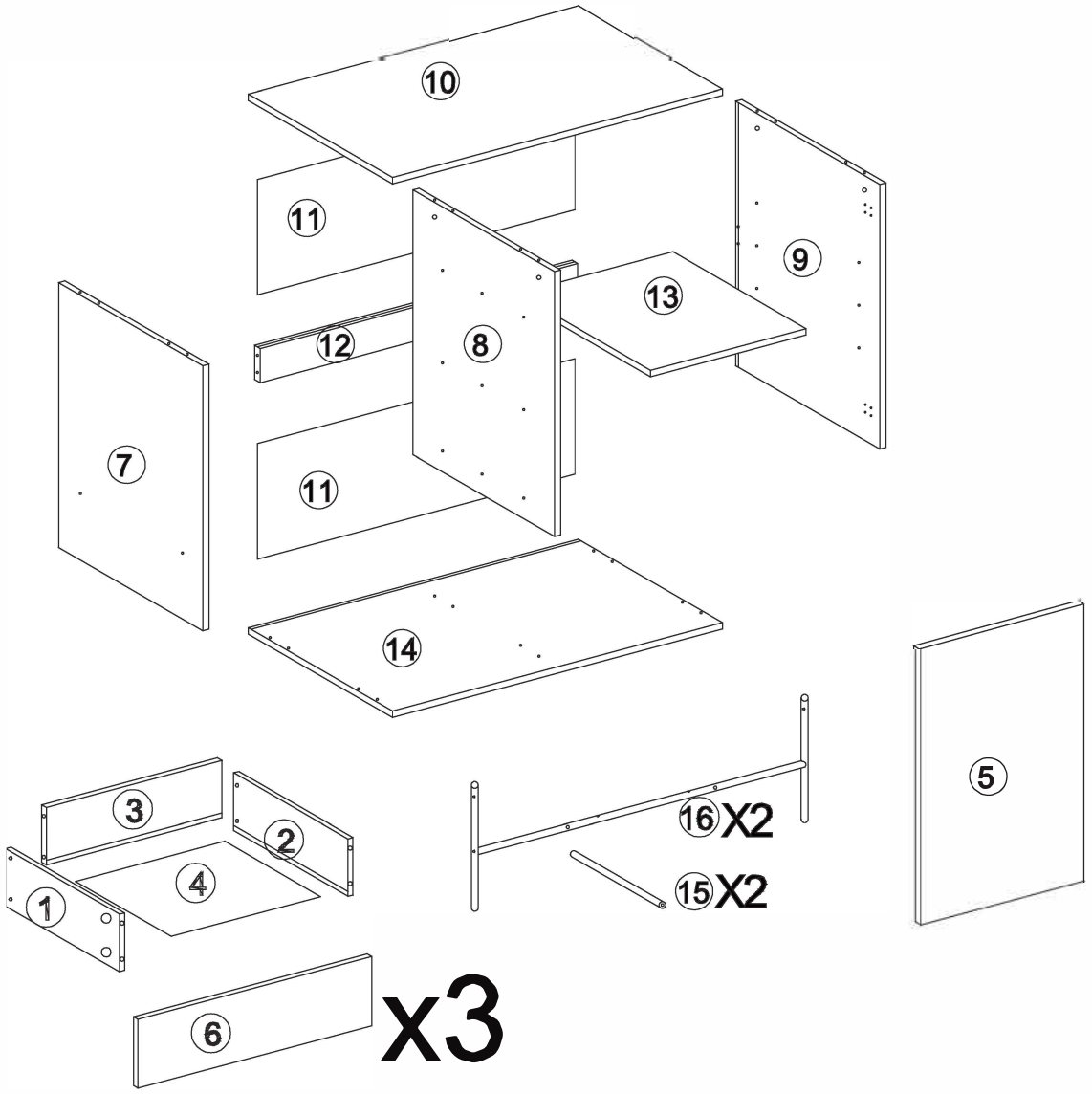

P1		22 PCS
P2		22 PCS
P3	M4X35mm	14 PCS
P4	M8X30mm	12 PCS
P5	M3.5X12mm	46 PCS
P6	CL DL DR CR	3 SETS
P7		1 PC
P8		4 PCS
P9	M6X30mm	8 PCS
P10	M6X35mm	4 PCS
P11	M5X40mm	8 PCS
P12		2 PCS
P13		4 PCS
P14		2 PCS
P15	M4X12mm	12 PCS
P16		2 PCS
P17		4 PCS

1

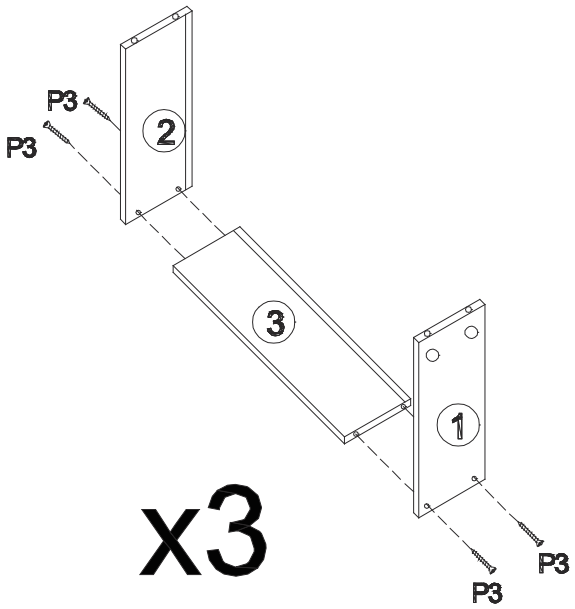
P3
P3
2
3
1
P3
P3
x3

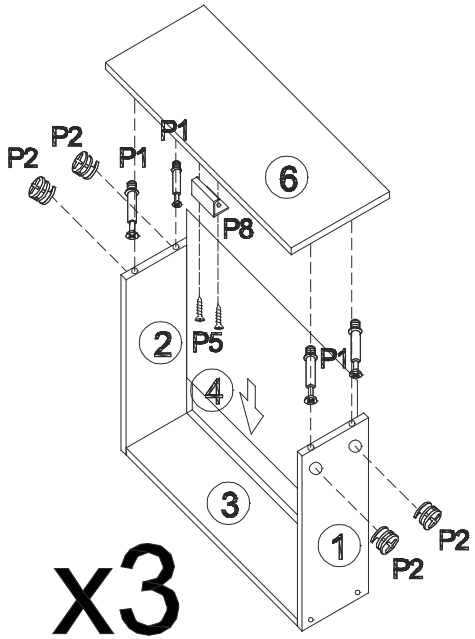
P2
P2
P1
P1
6
P8
2
P5
4
P1
3
1
P2
P2
x3

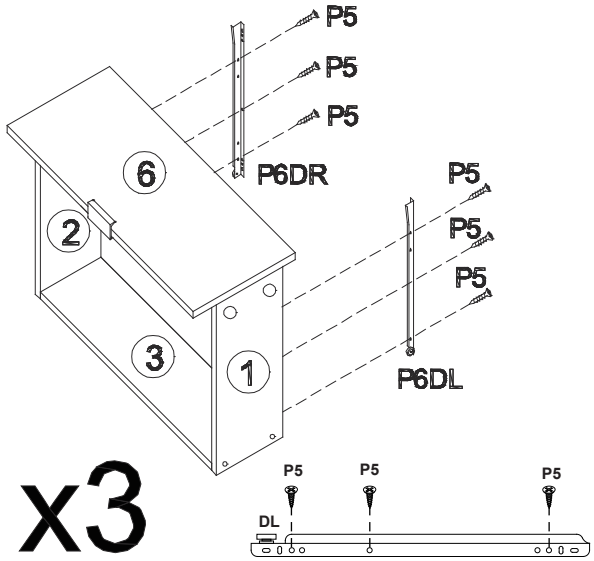
P5
P5
P5
6
P6DR
P5
P5
P5
2
3
1
P6DL
x3
P5
P5
P5
DL

2

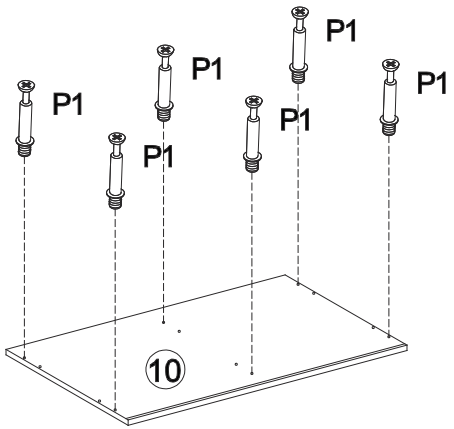
P1
P1
P1
P1
P1
P1
10

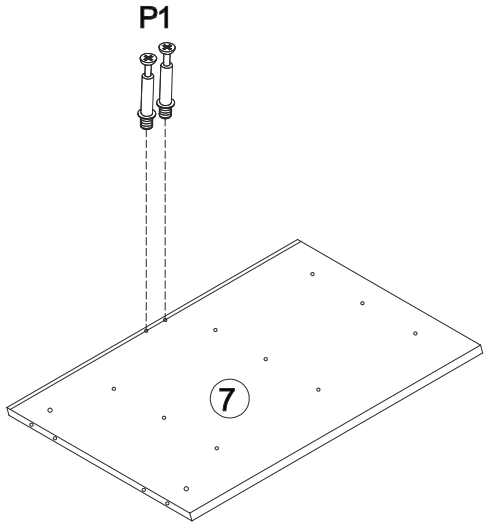
P1
7

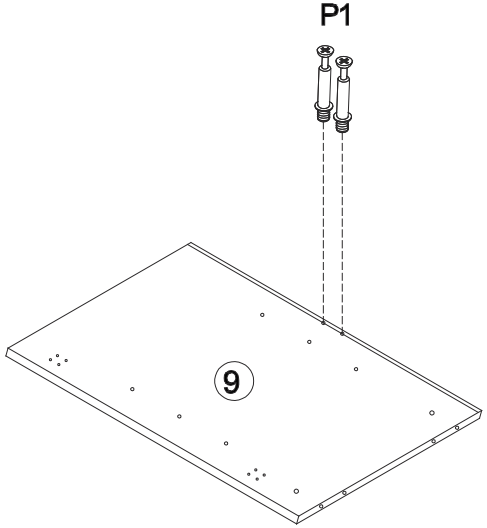
P1
9

3

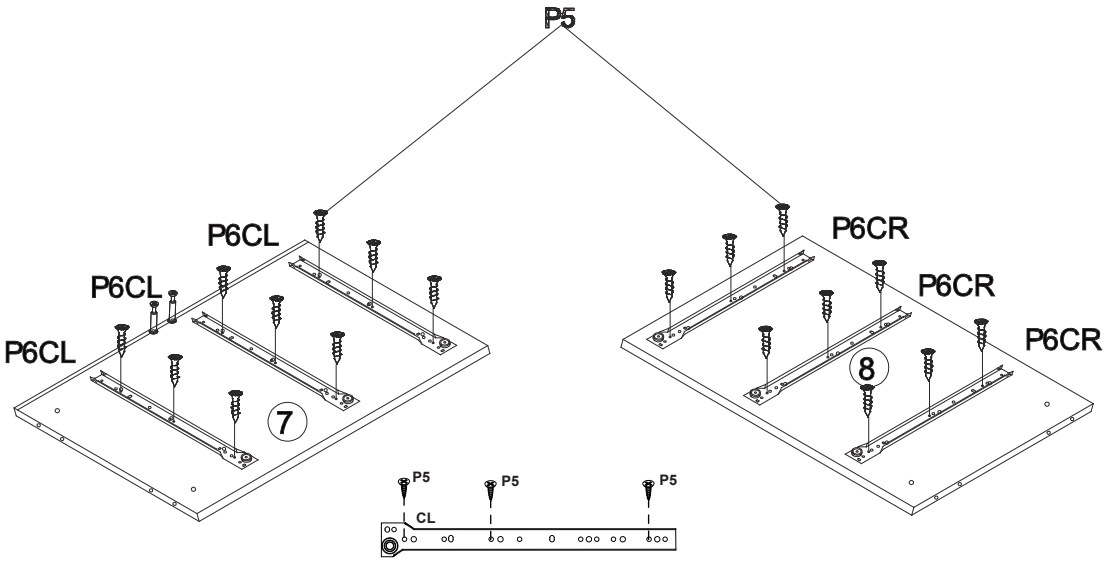
P5
P6CL
P6CL
P6CL
7
P6CR
P6CR
P6CR
8
P5
P5
P5
CL

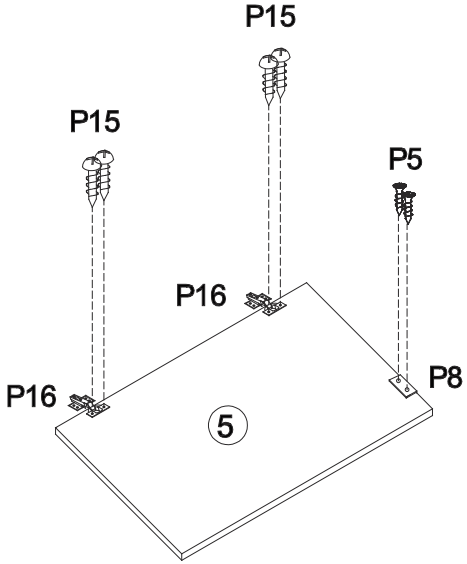
P15
P15
P5
P16
P16
P8
5

4

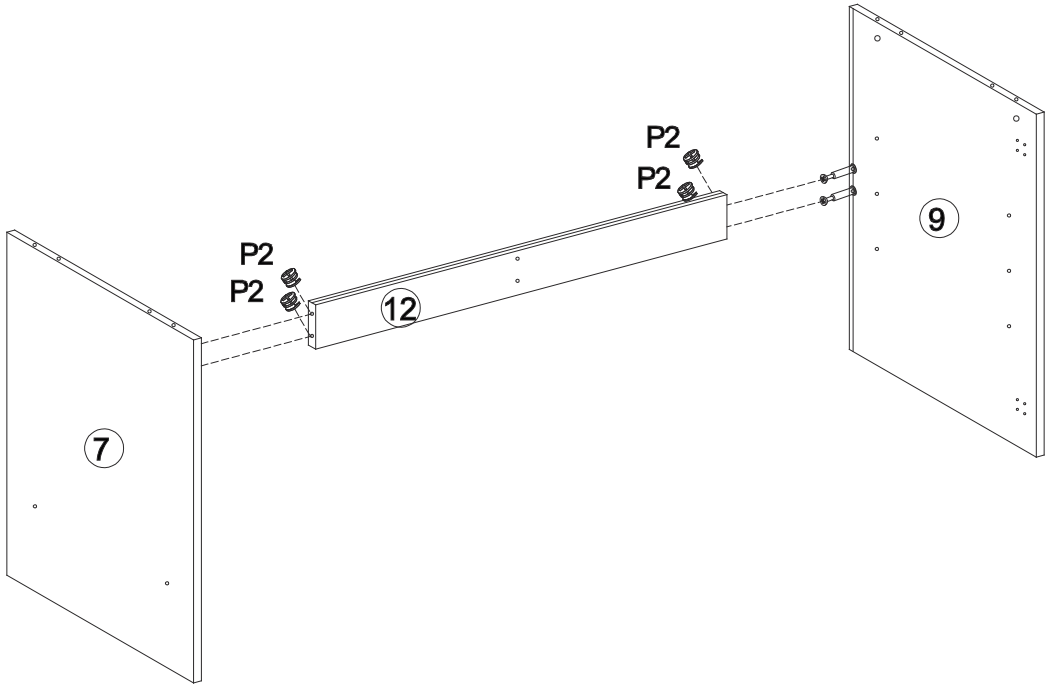
P2
P2
P2
P2
9
12
7

5

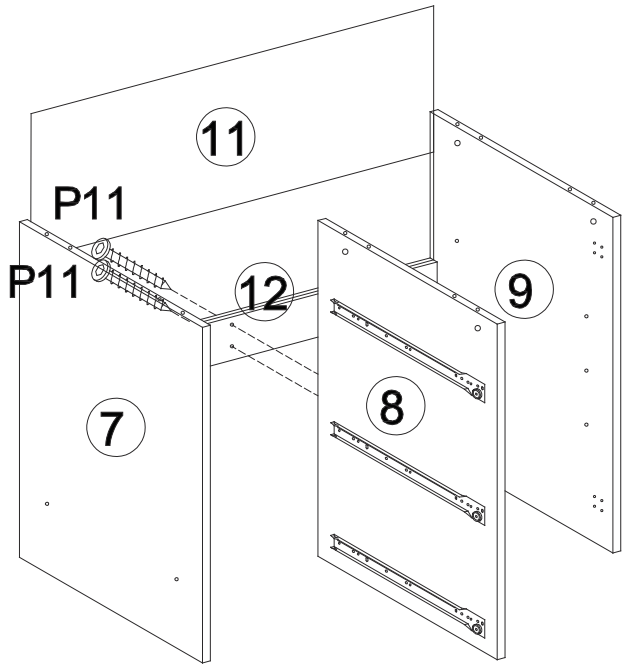

6

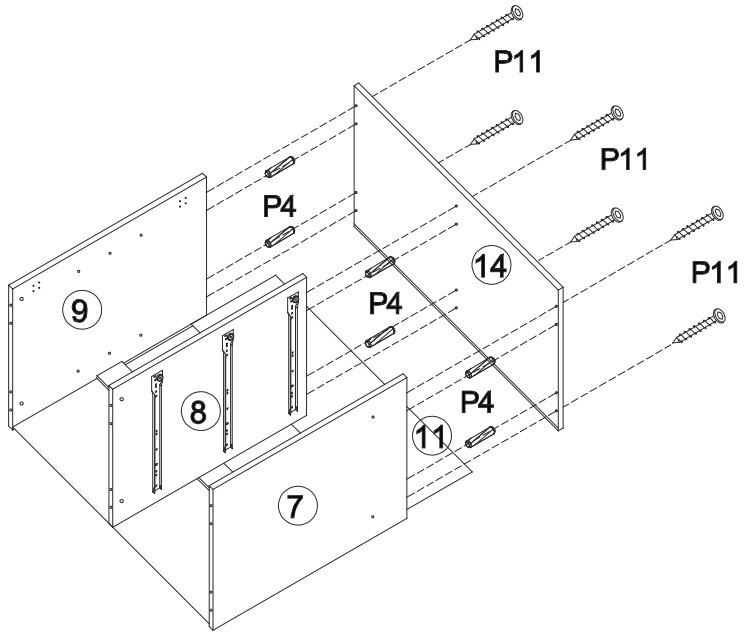

7

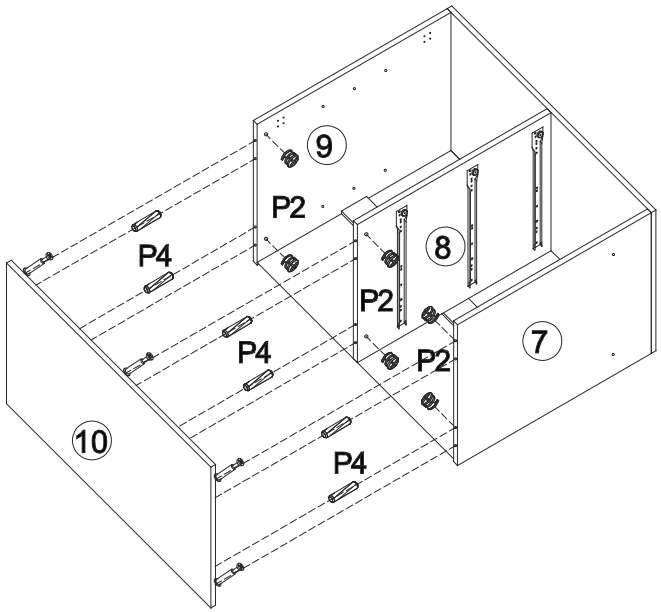
9
P2
P4
8
P2
7
P4
P2
10
P4

8

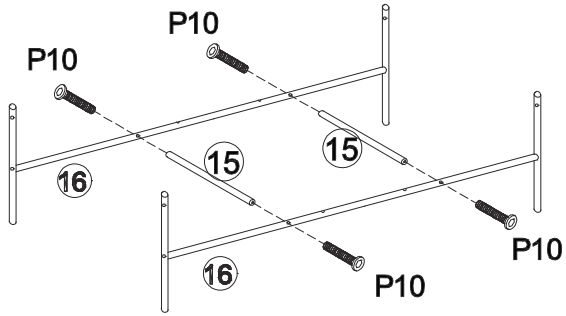
P10
P10
15
15
16
P10
16
P10

9

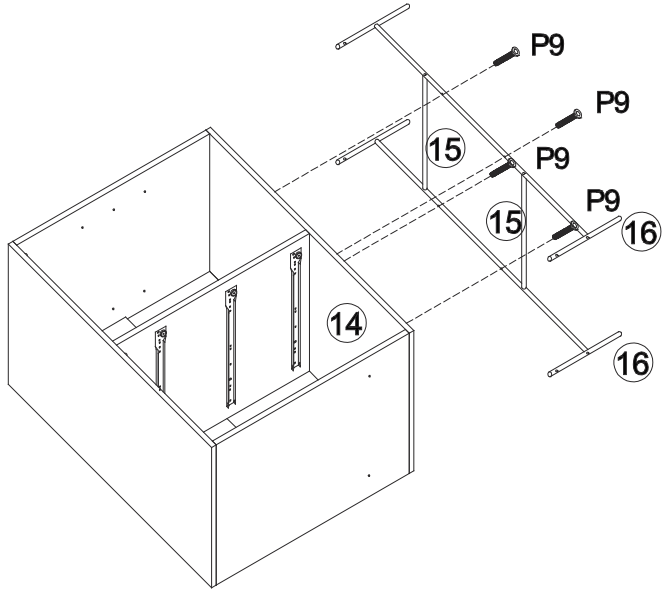
P9
P9
15
P9
P9
15
16
14
16

10

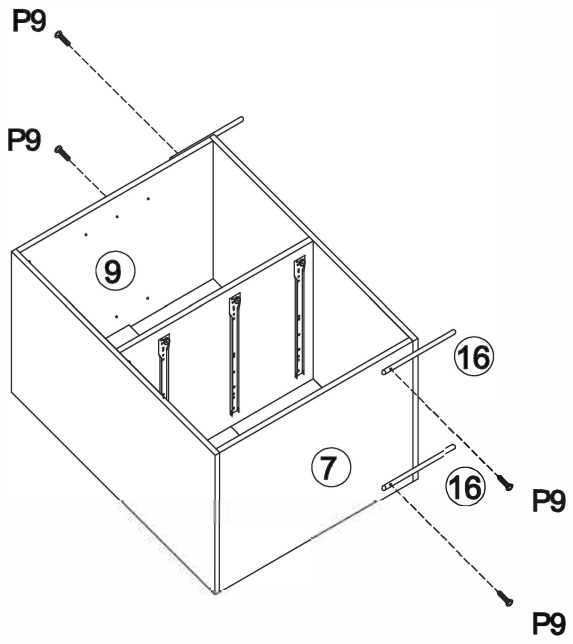

11

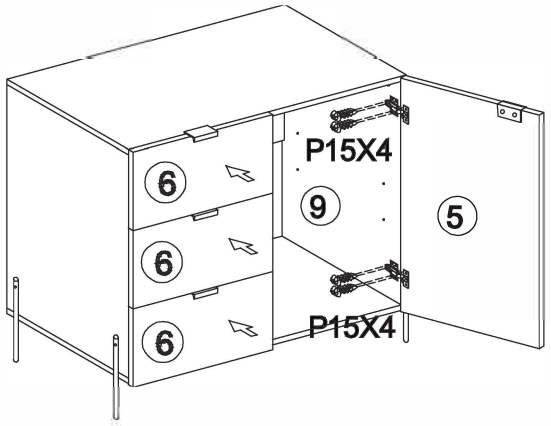

12

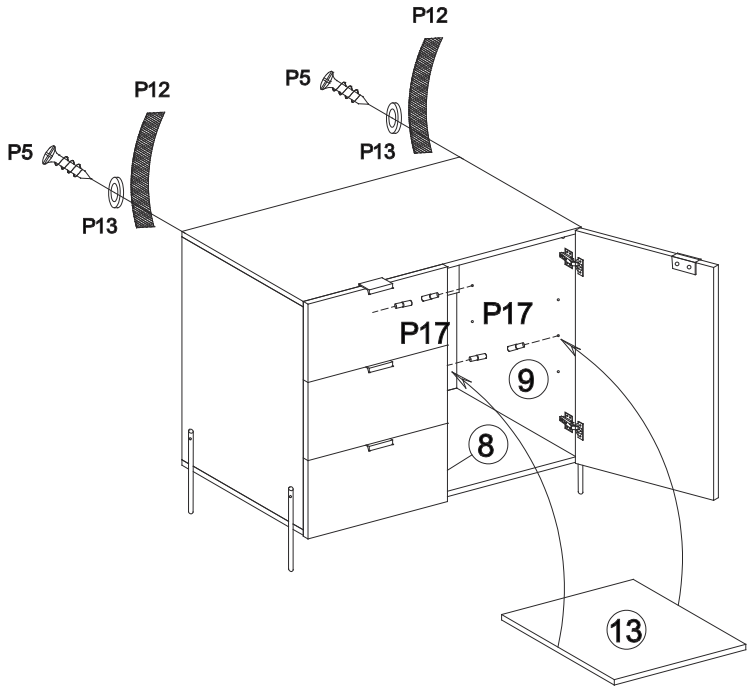
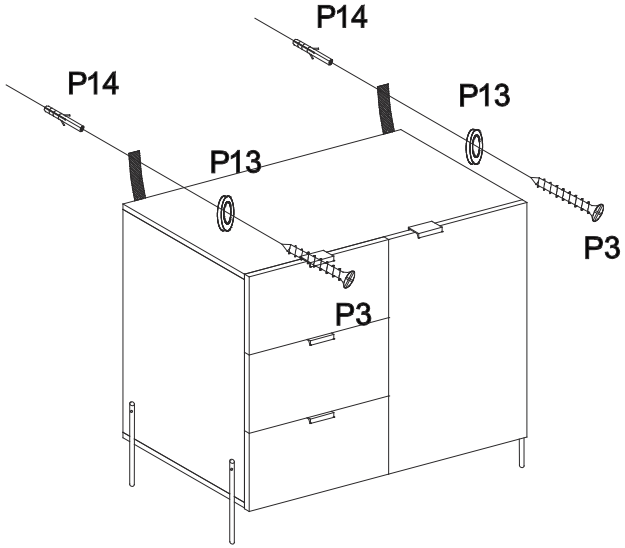
13