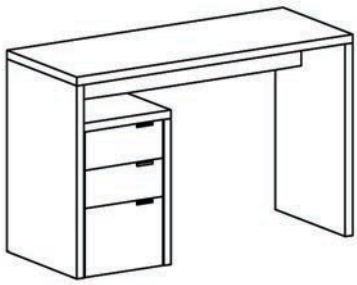

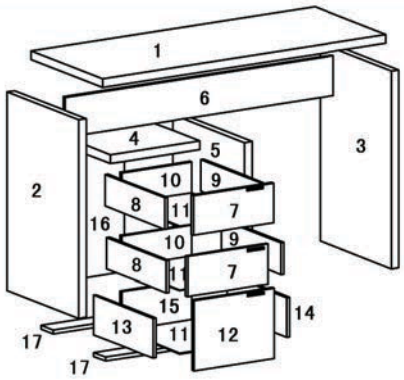

	A x 31		B x 31		C x 12		D x 30		Ex3		Fx12

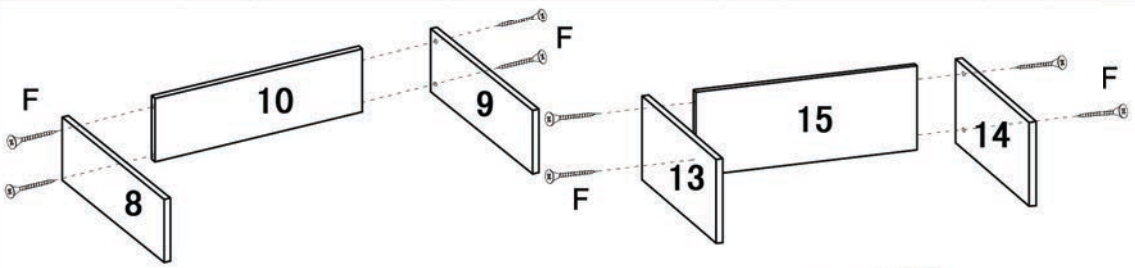

Gx6

Hx6

Ix4

Jx16

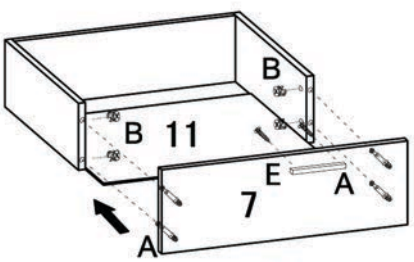

X2

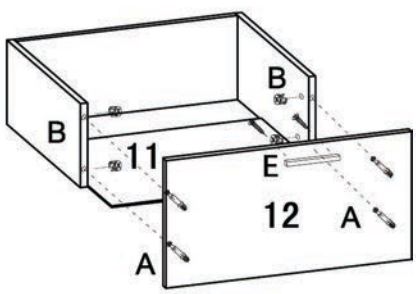

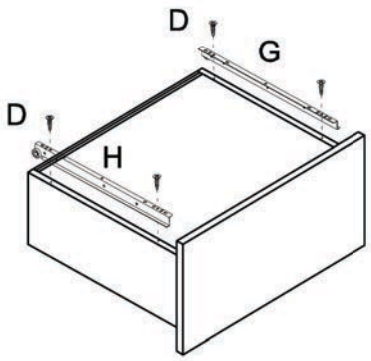

X2

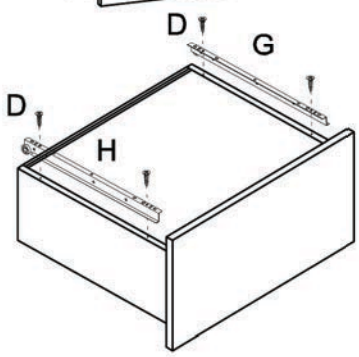

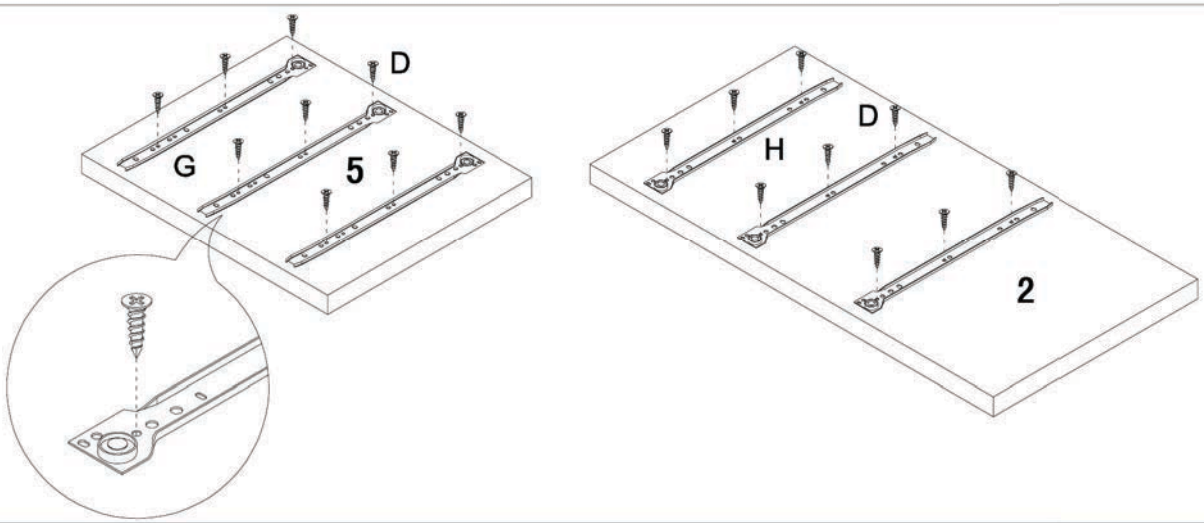

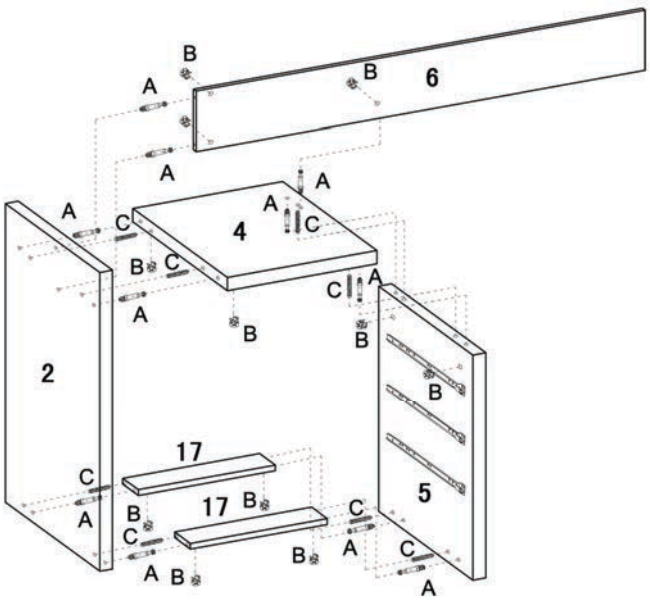
6
4
2
17
17
5

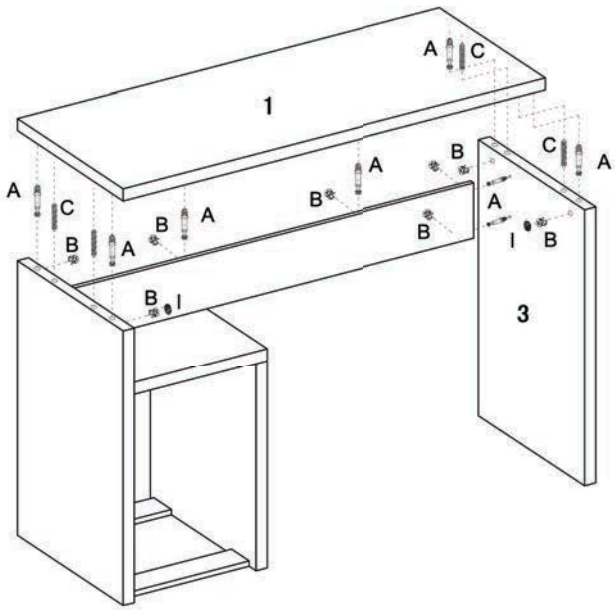
1
3

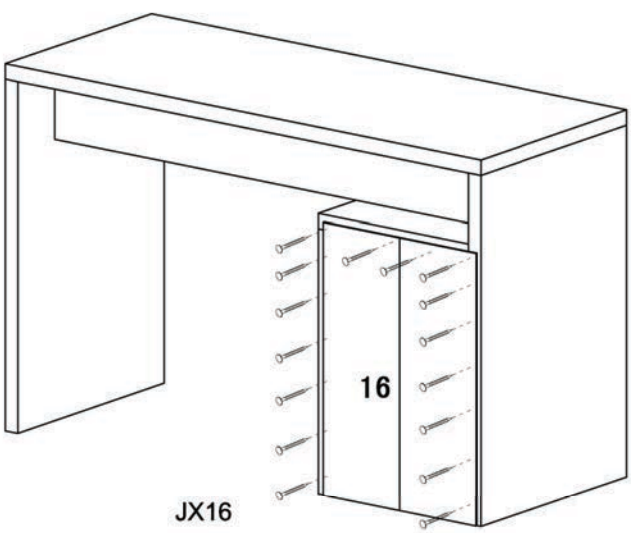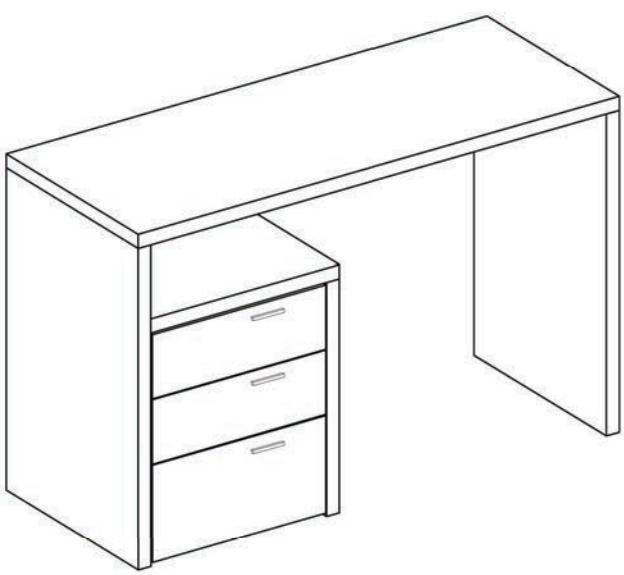
16
JX16