1

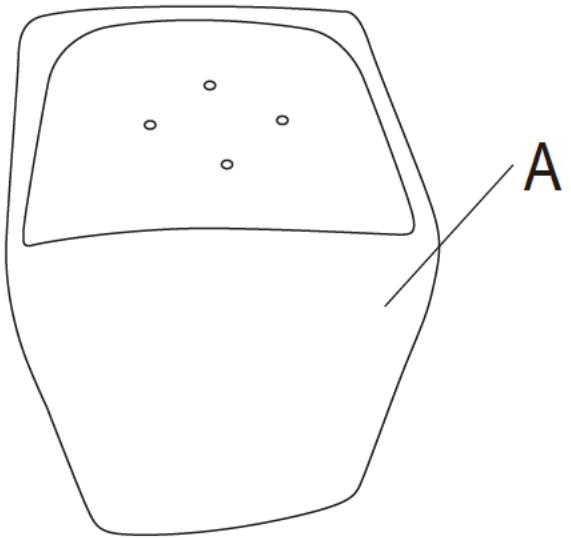

2

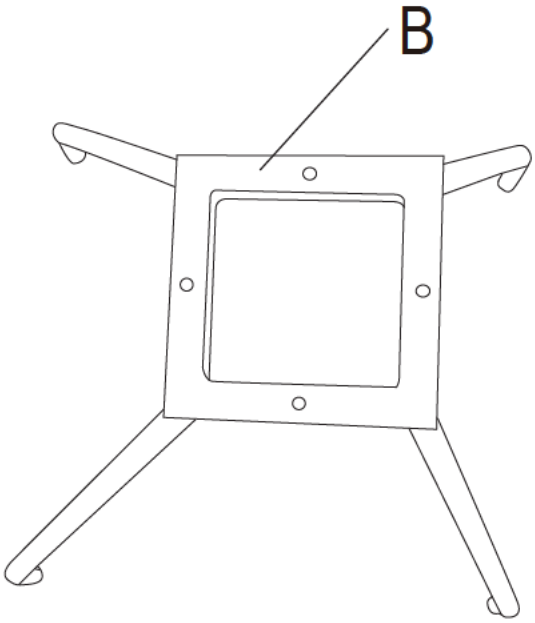

3

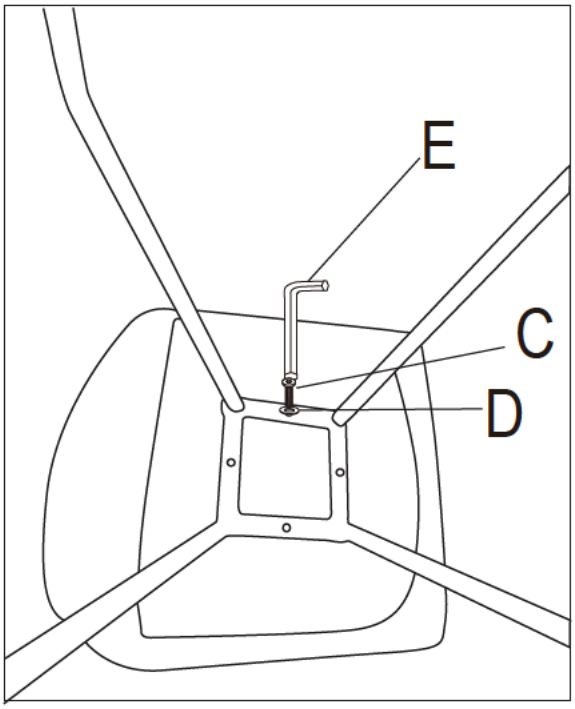

4

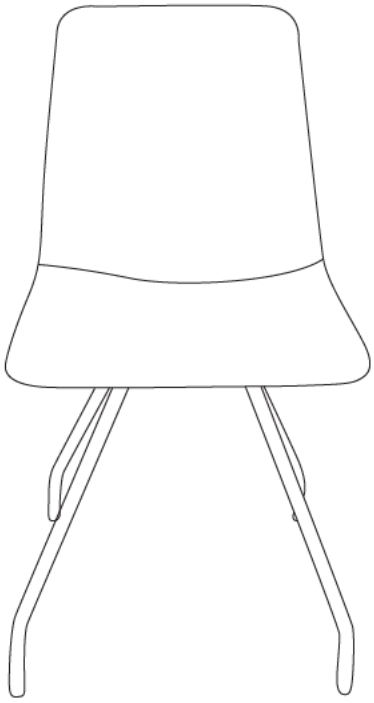

Ax1	Bx1	Cx4	Dx4	Ex1