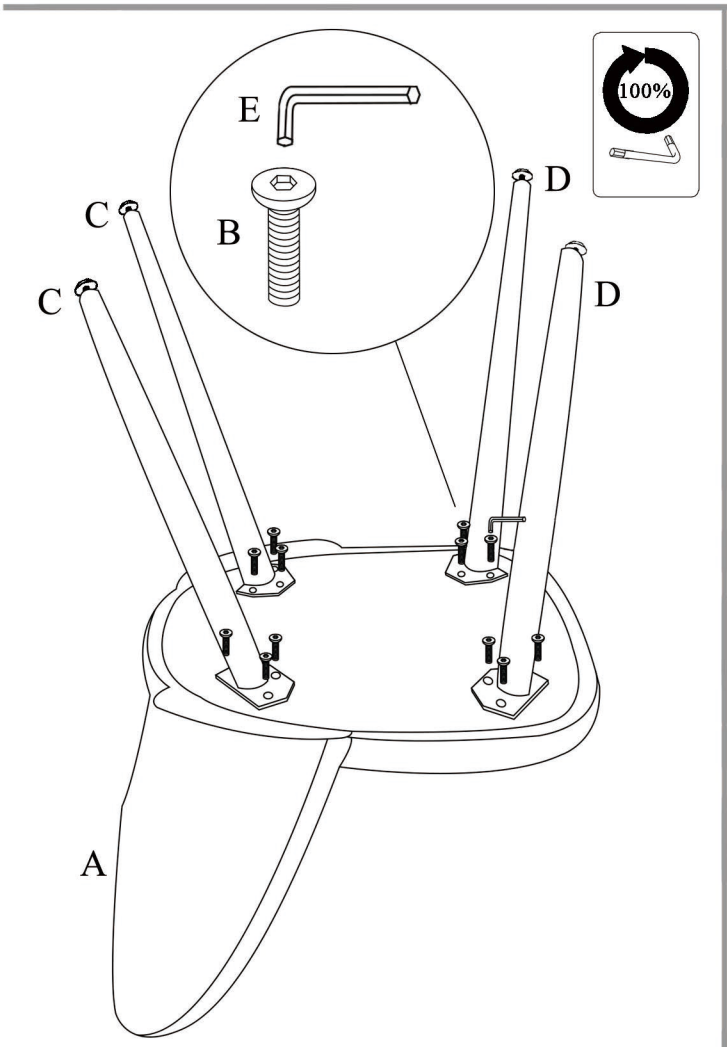

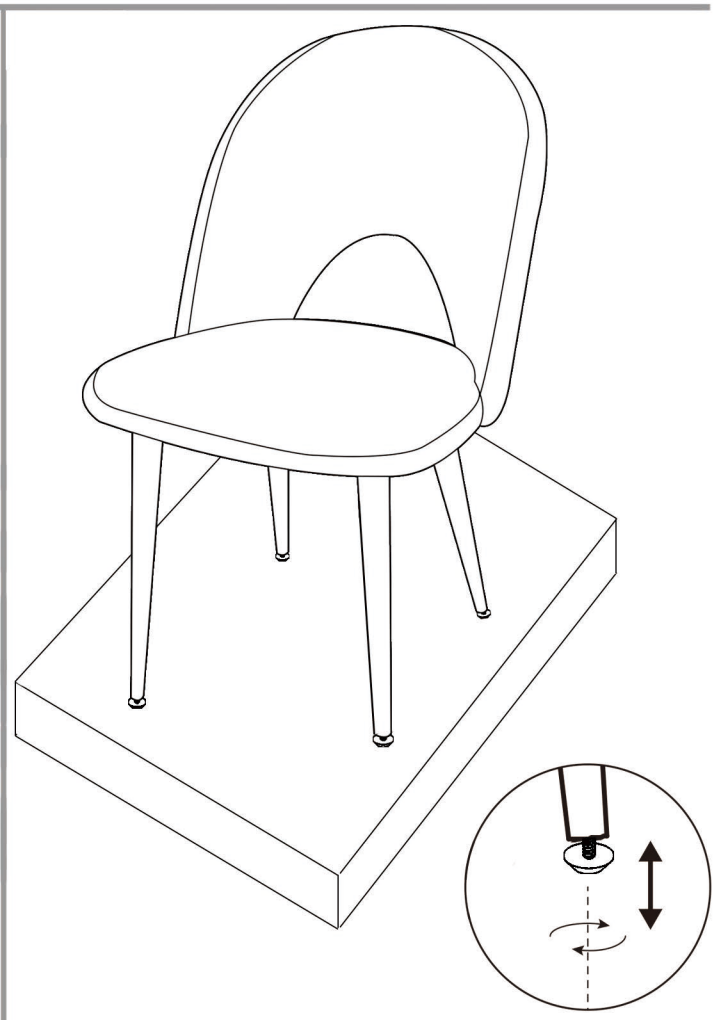

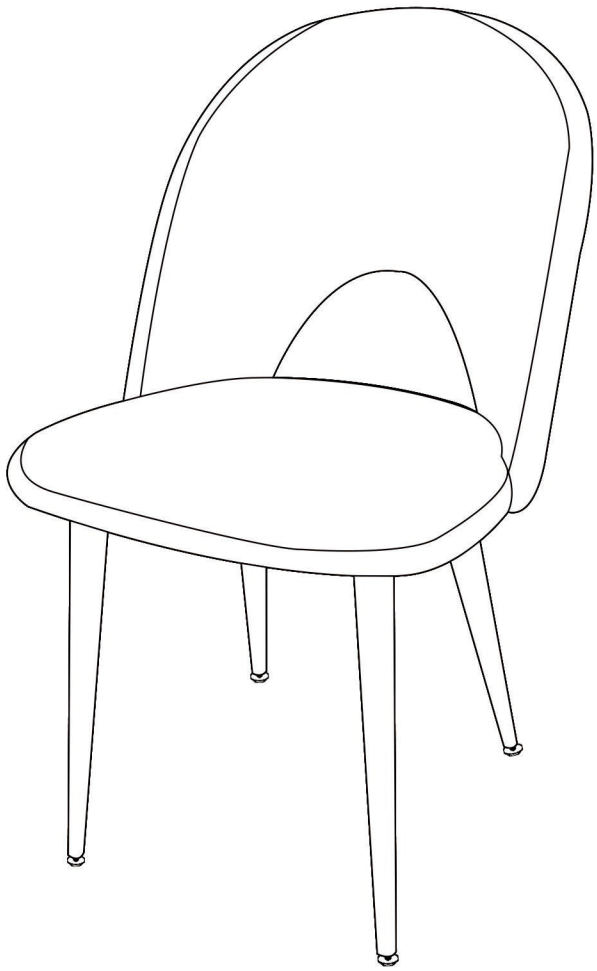

A	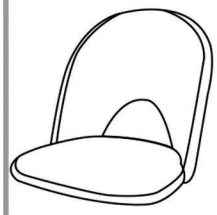 x1	B	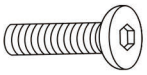 x12
C	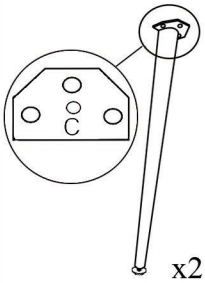 x2	D	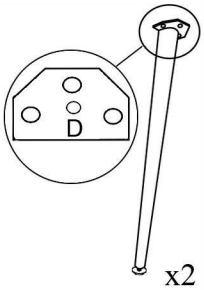 x2
E	x1		