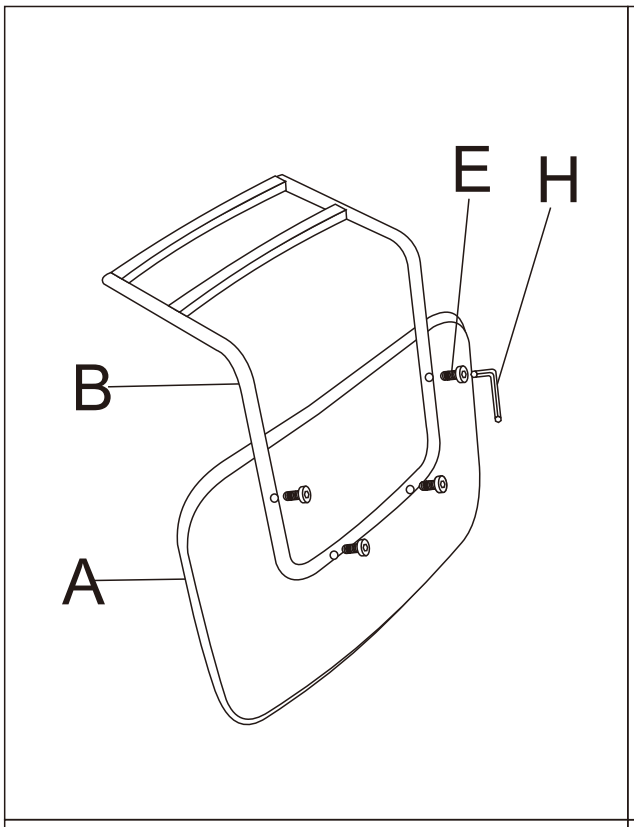

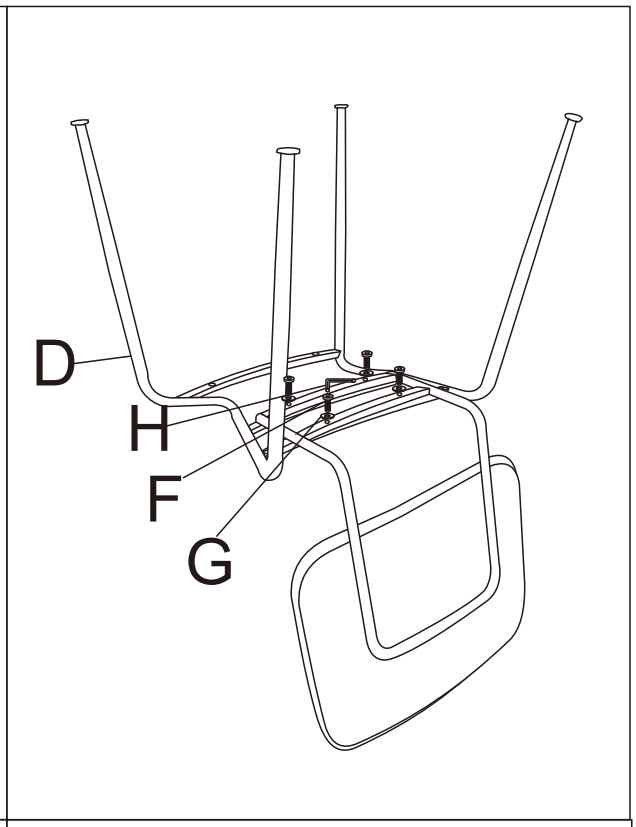

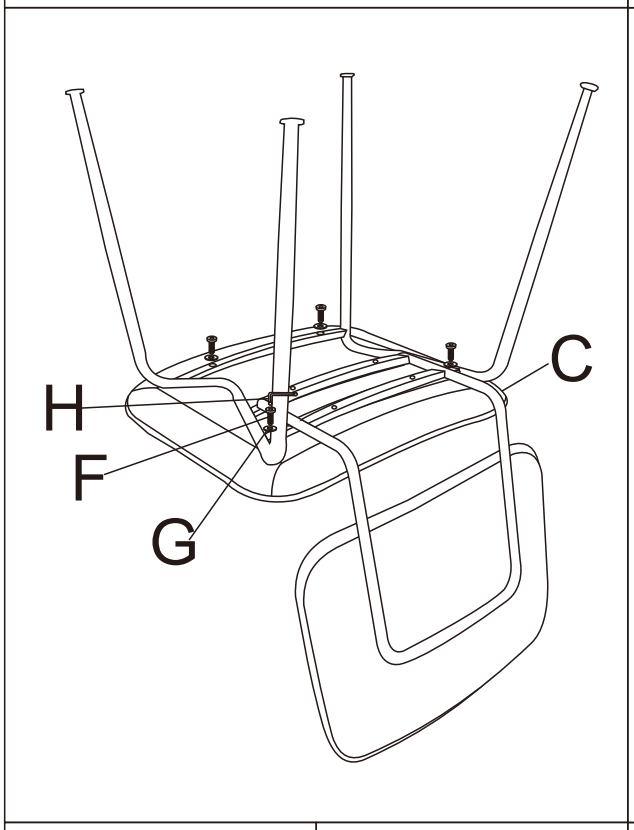

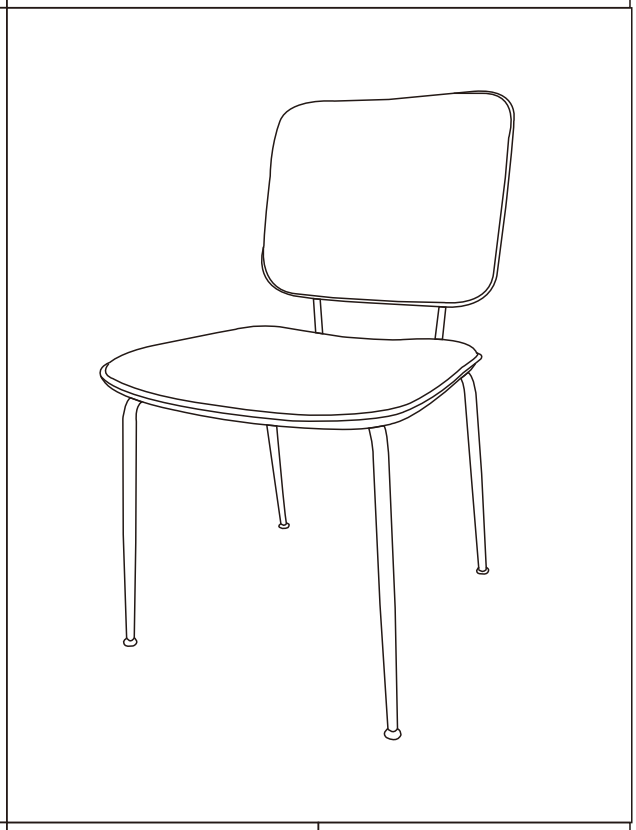

A x1	B 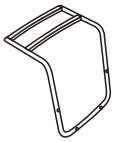 x1	C x1	D x1
E x4	F 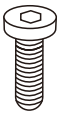 x8	G x8	H x1