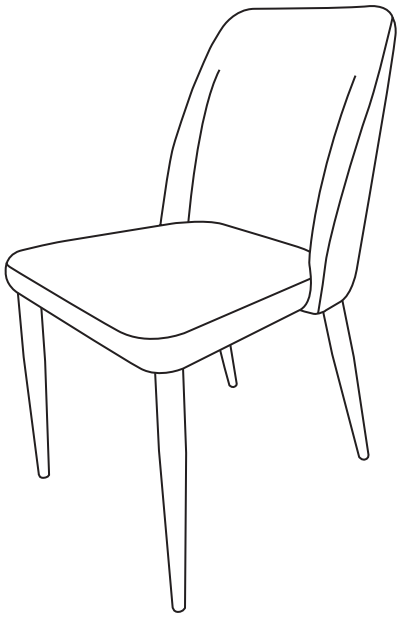
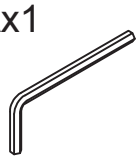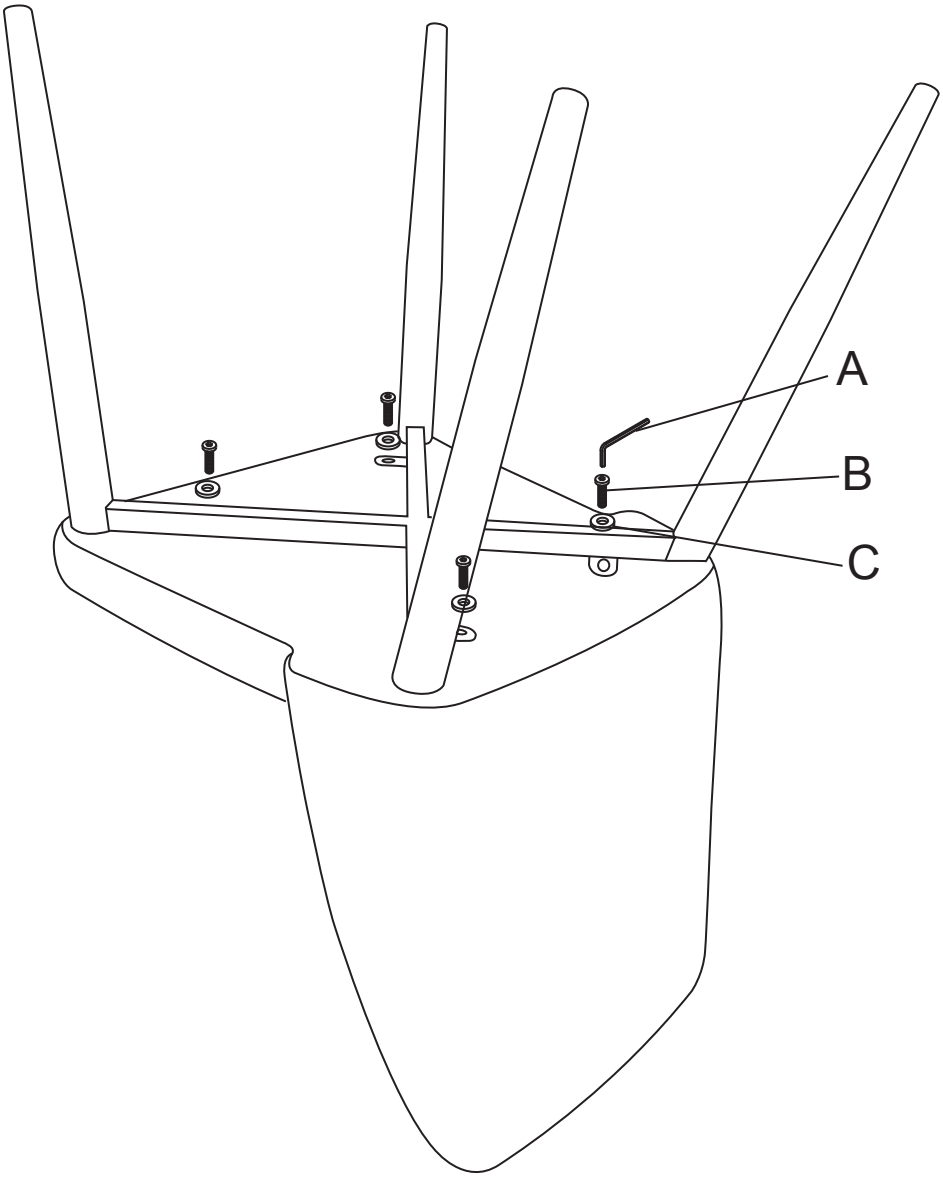
Ax1	Bx4	Cx4