ASSEMBLY INSTRUCTION/ΣΧΕΔΙΟ ΣΥΝΑΡΜΟΛΟΓΗΣΗΣ

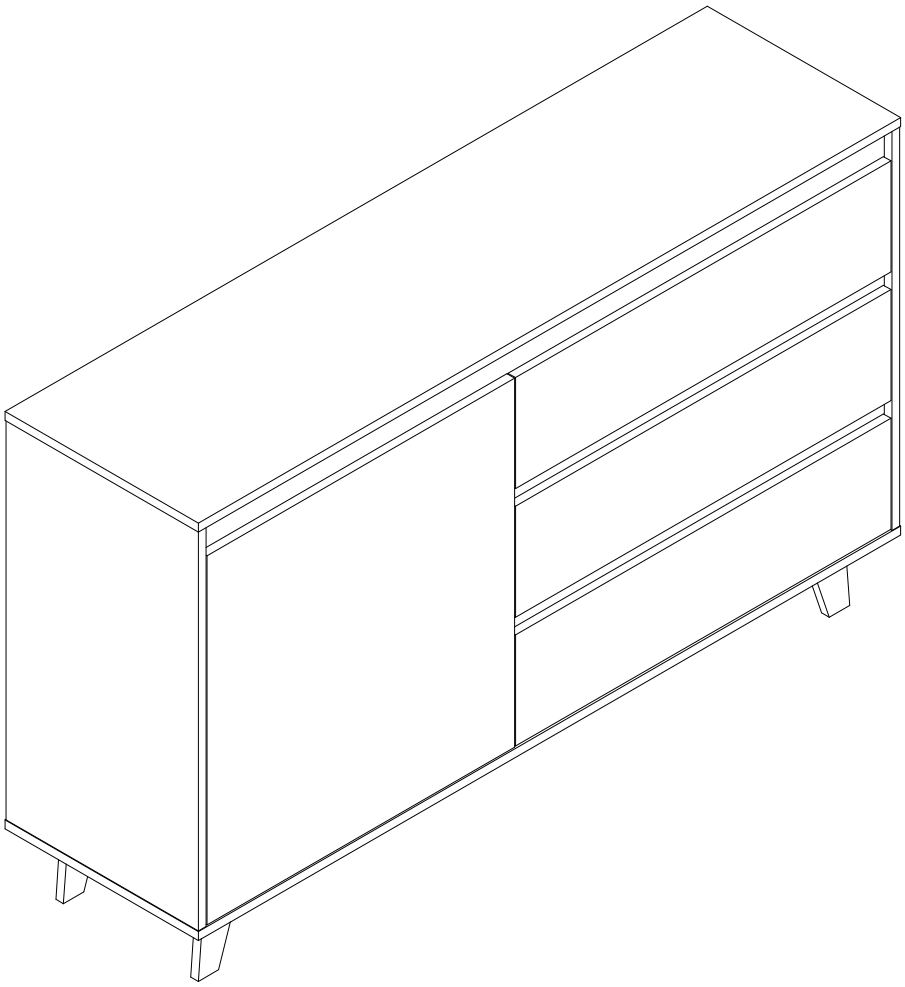

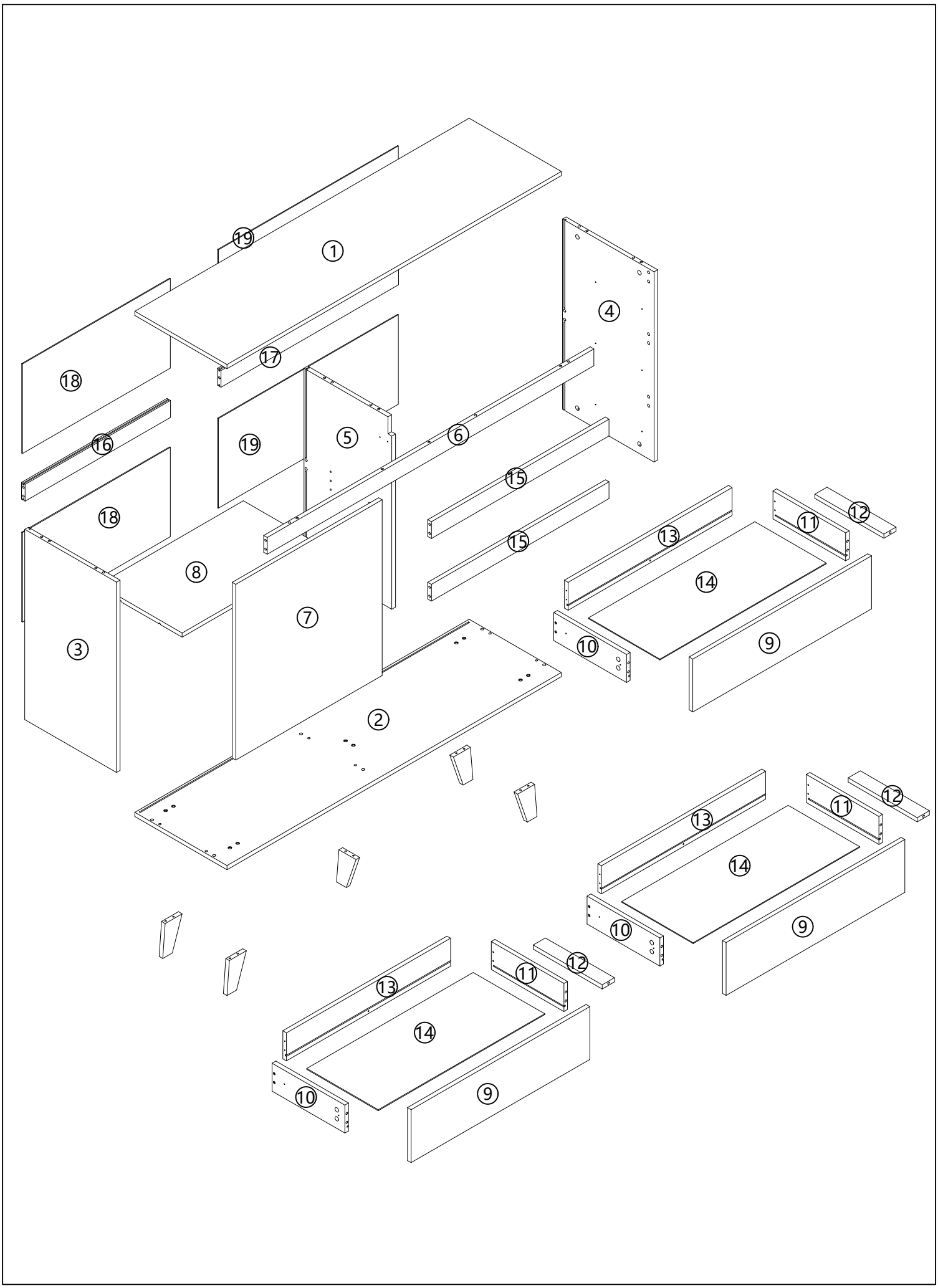

19
1
4
17
18
16
19
5
6
15
18
15
13
11
12
8
14
7
3
10
9
2
13
11
12
14
10
9
13
11
12
14
10
9

A x 52 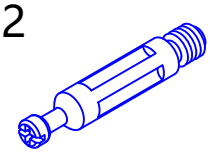 A1 A2	B x 15 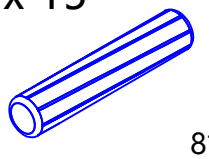 8*40	C x 10 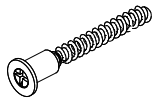 7*50	
D x 52 3.5*14	E x 15 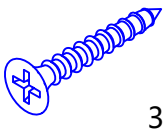 3.5*35	F x 2 	G x 3 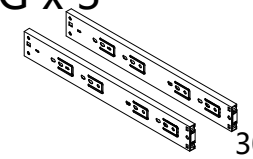 300
H x 1 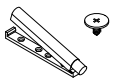	I x 2 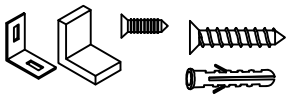	J x 16 	K x 62 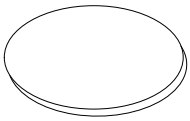
L x 4 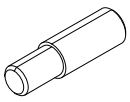			

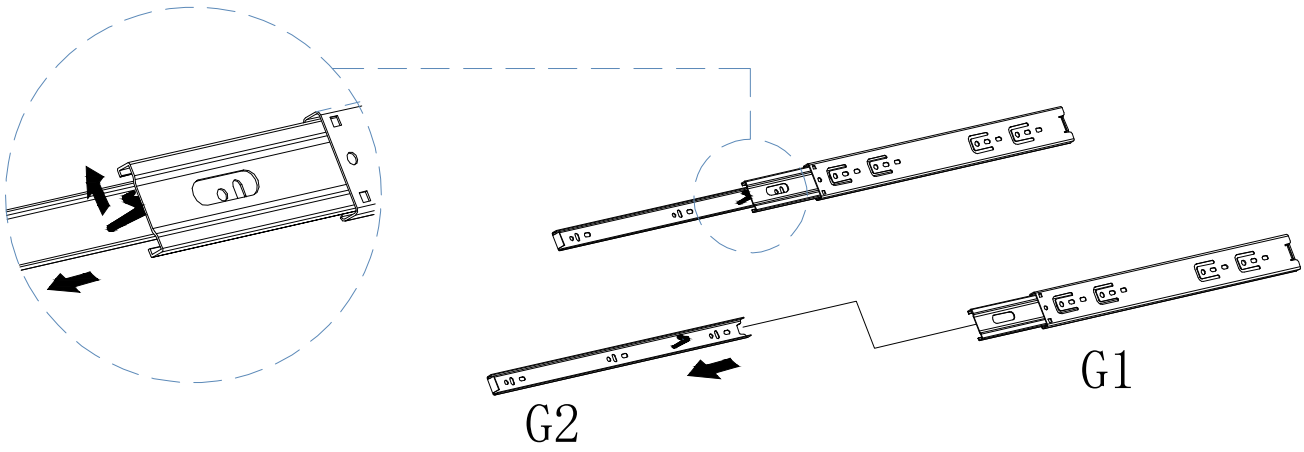

1

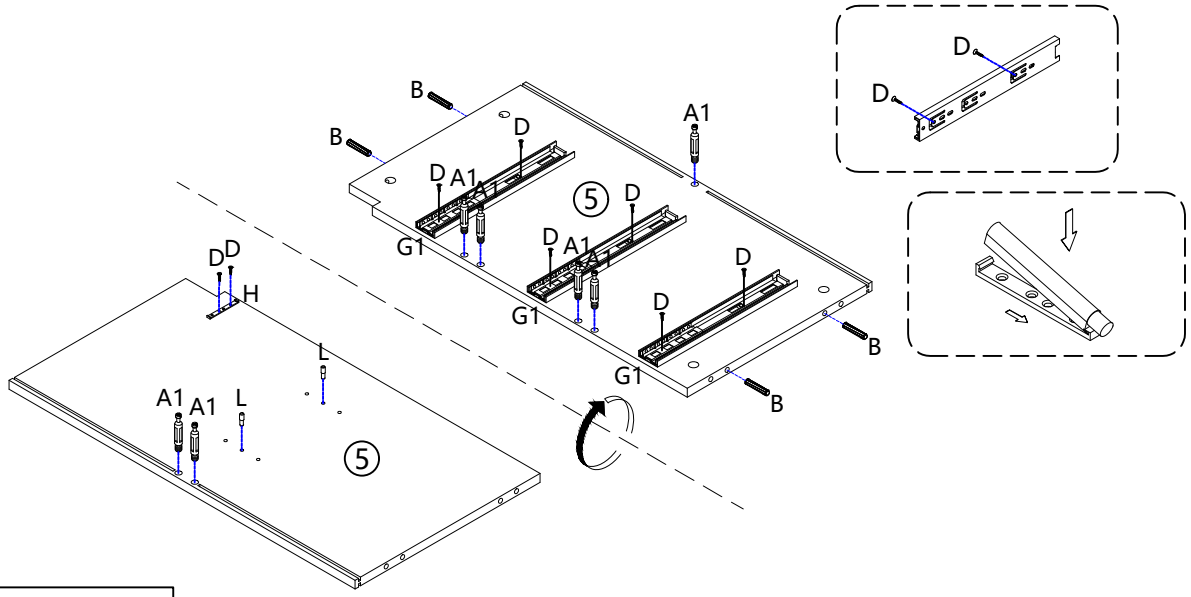

	A1 X 7		
	B X 4		
	D X 8		H X 1
	G1 X 3		L X 2

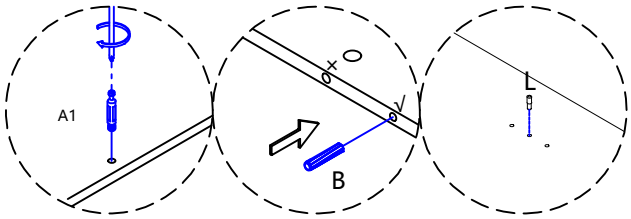

2

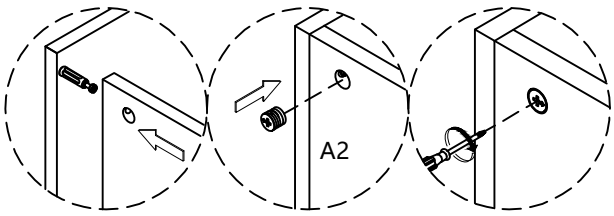

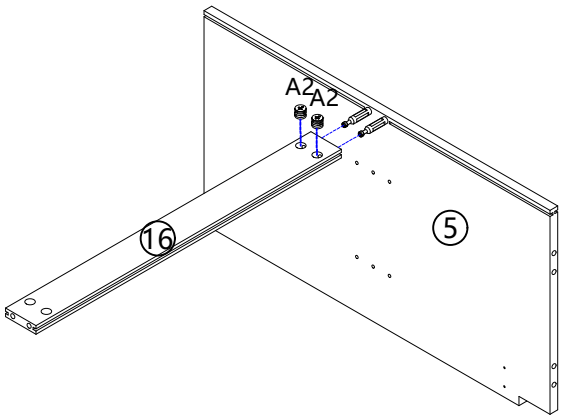

	A2 X 2

3

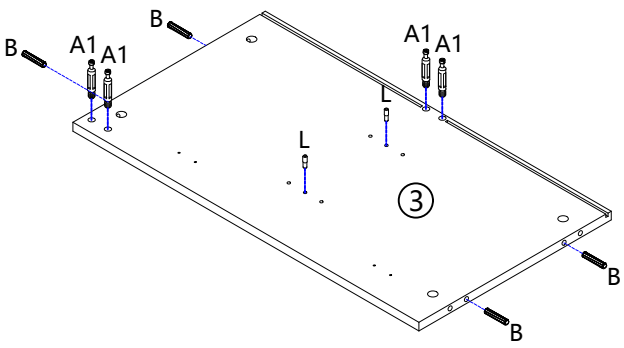

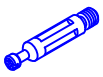	A1 X 4
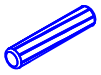	B X 4
	L X 2

4

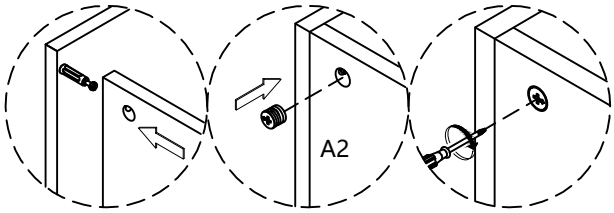

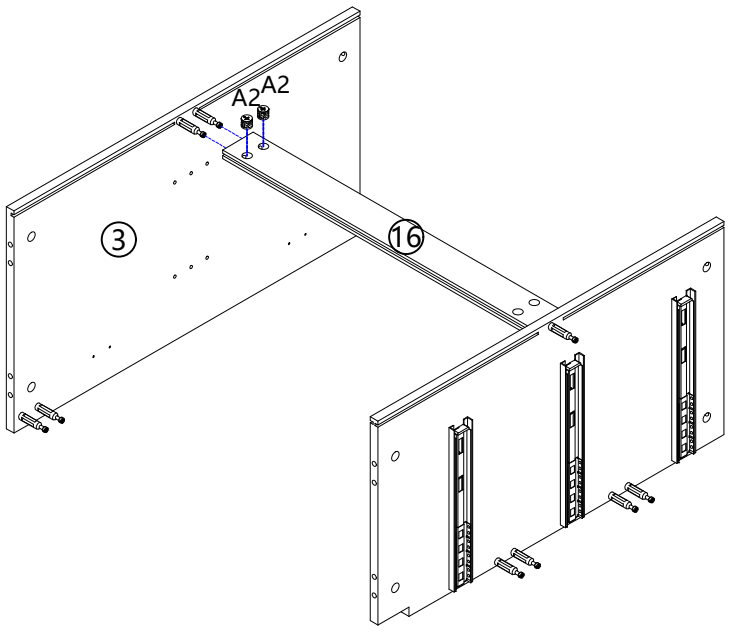

	A2 X 2

5

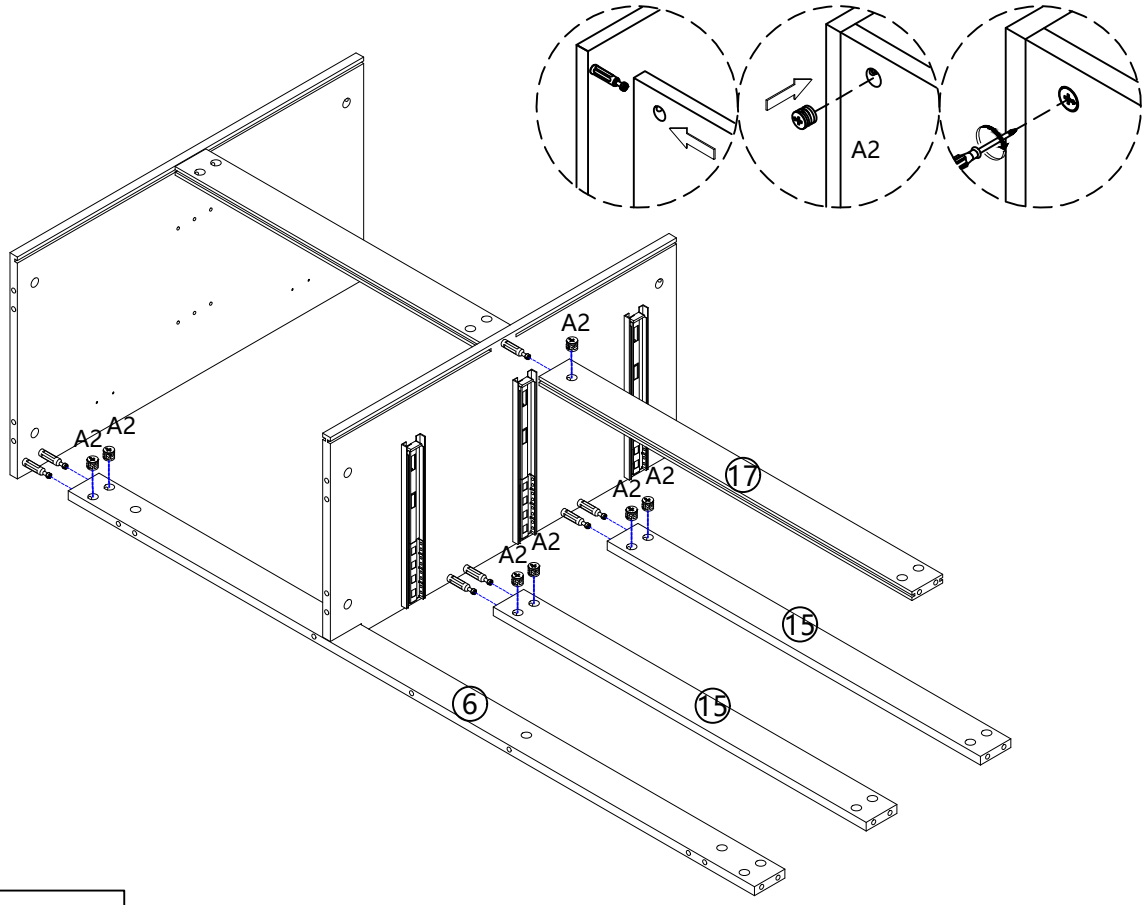

	A2 X 7

6

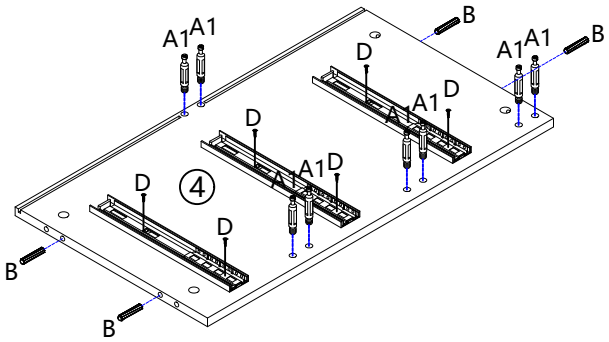

	A1 X 8
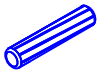	B X 4
	D X 6
	G1 X 3

7

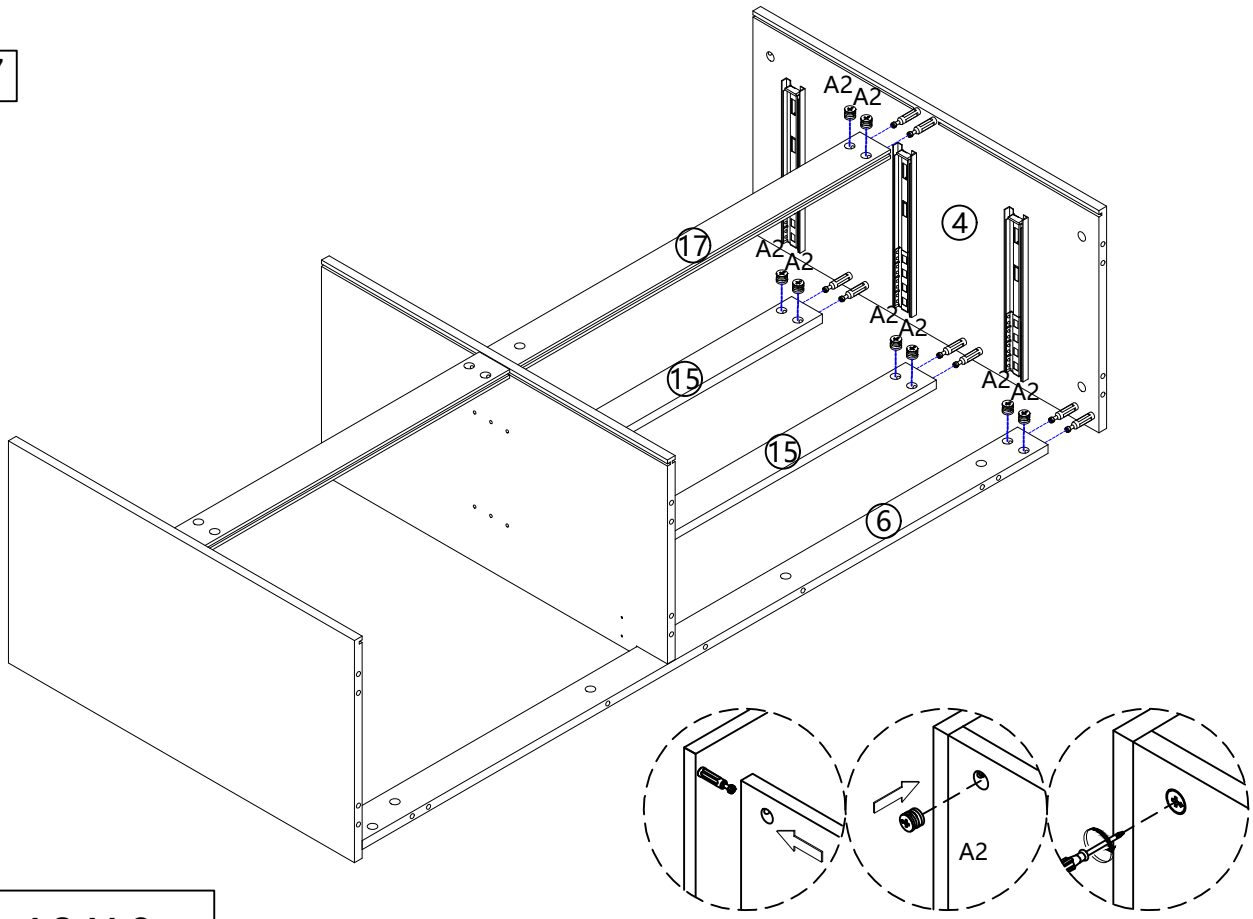

A2 X 8

8

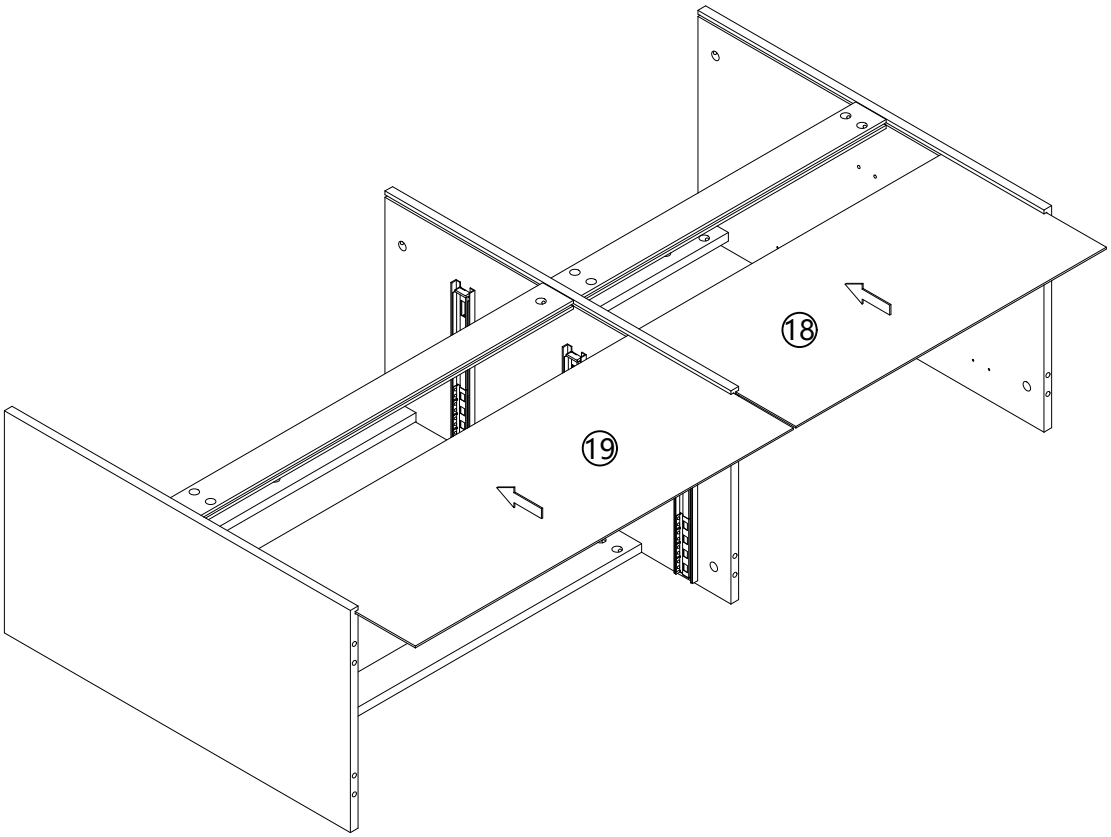

9

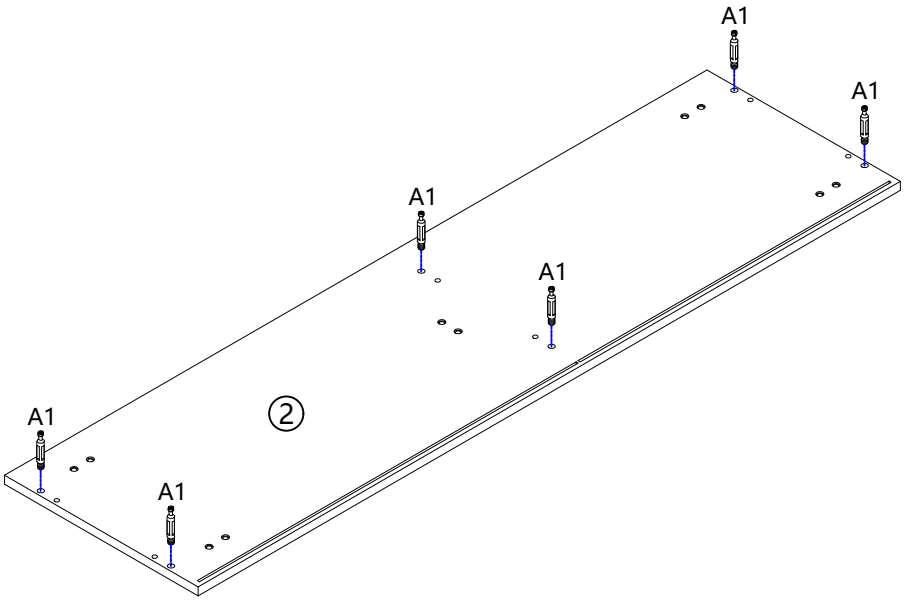

10

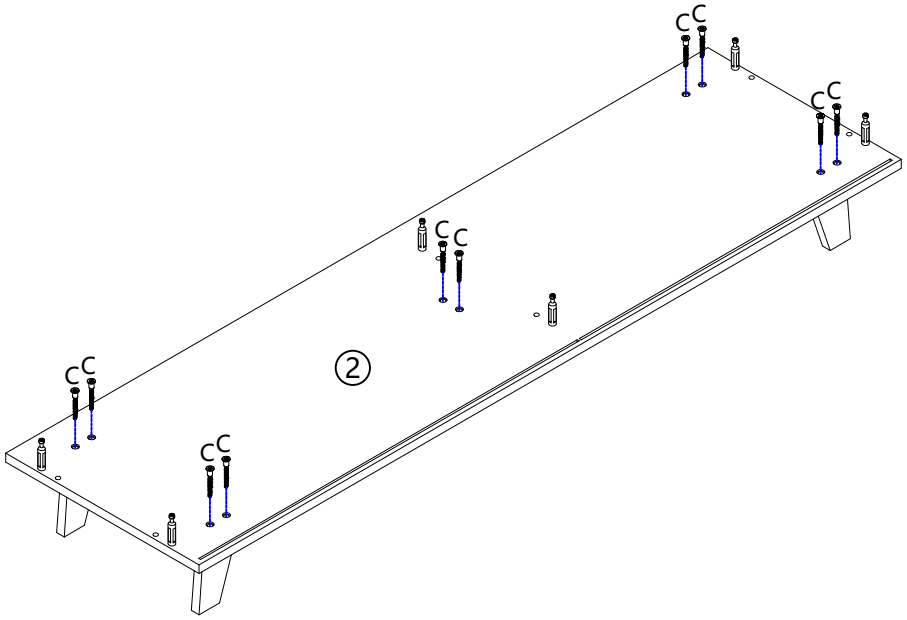

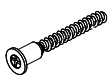

C X 10

11

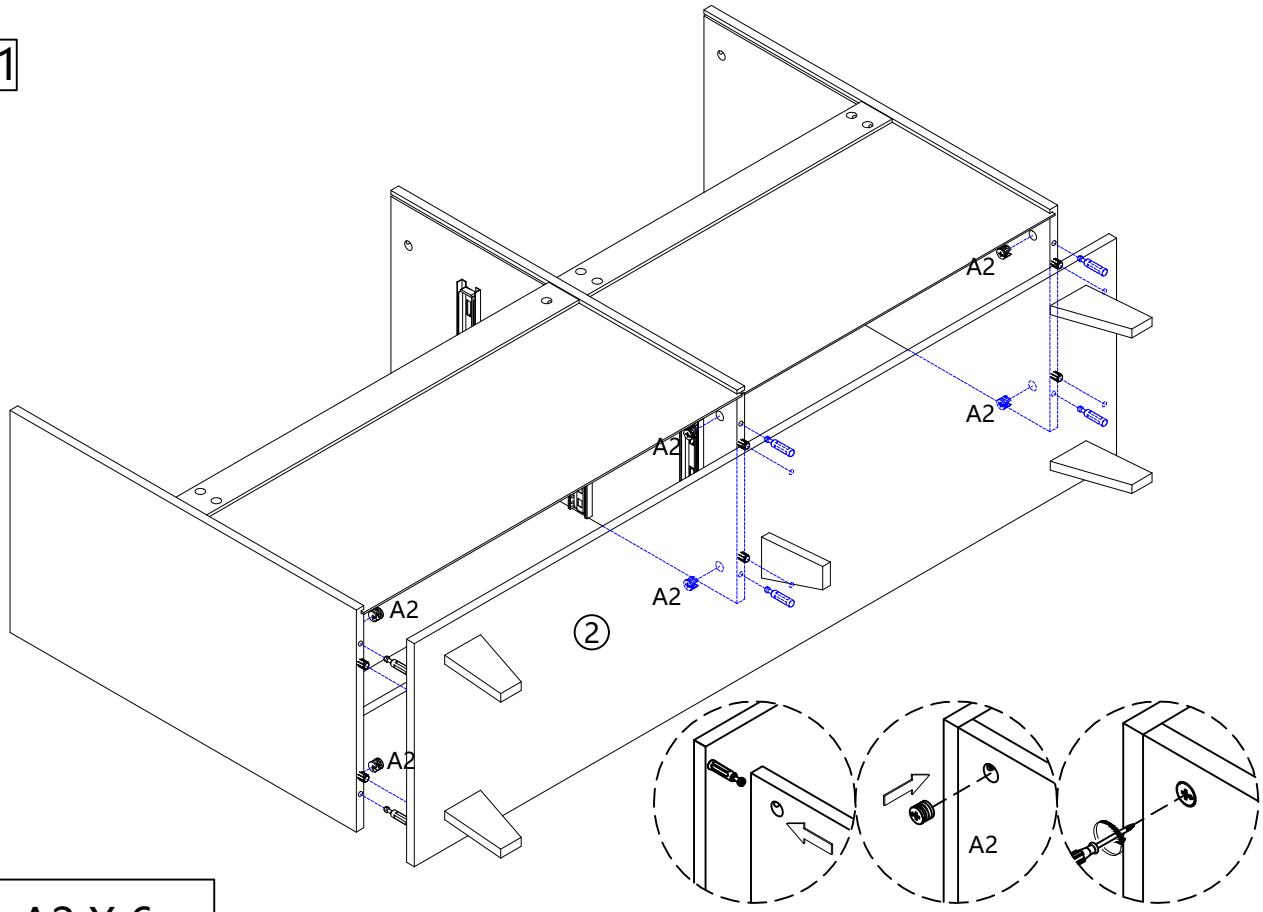

A2 X 6

12

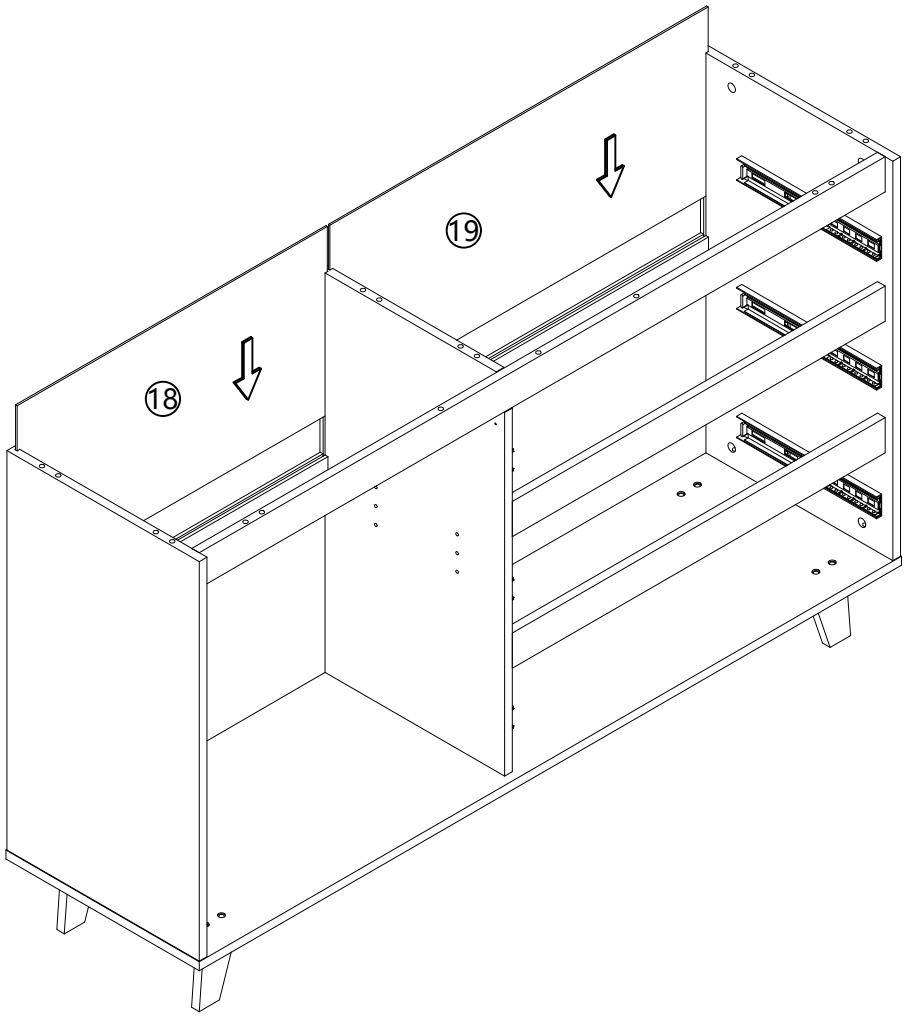

13

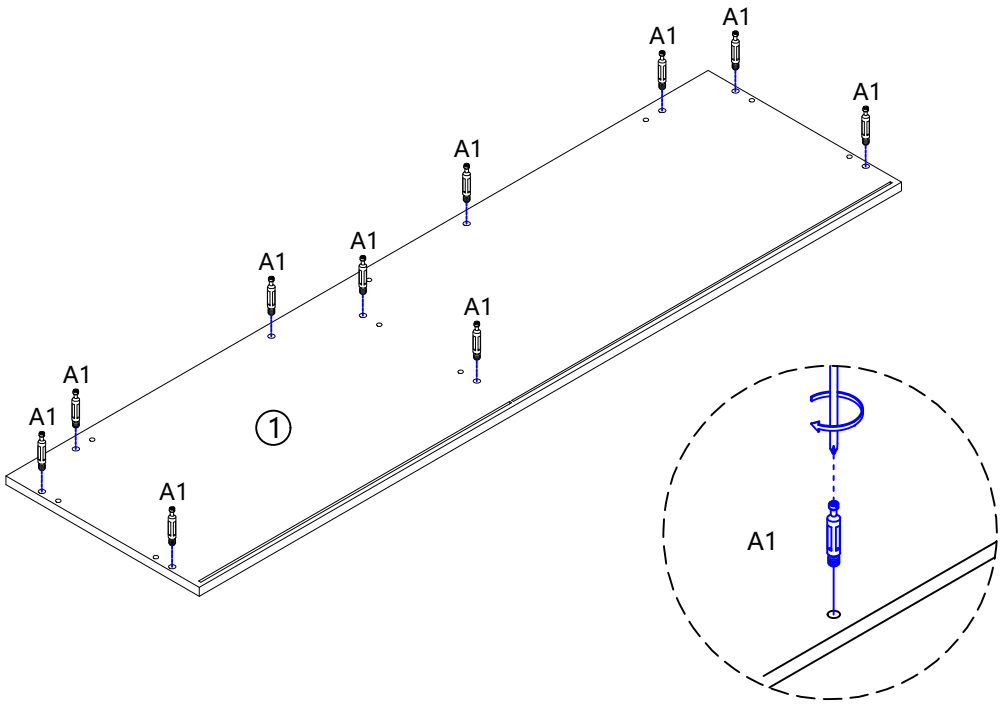

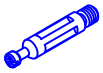

A1 X 10

14

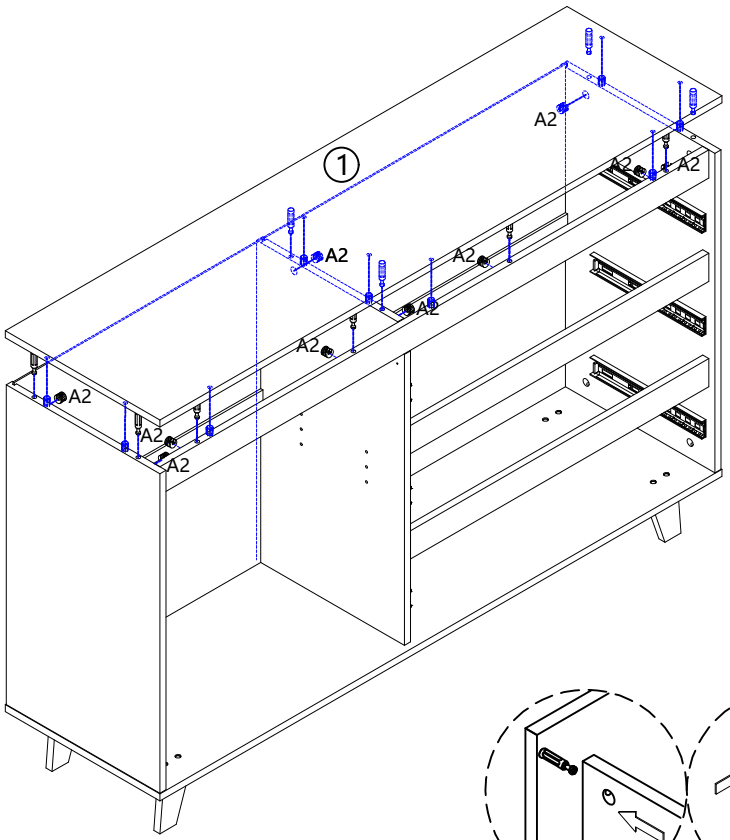

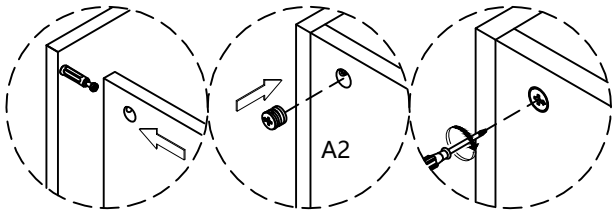

A2 X 10

15

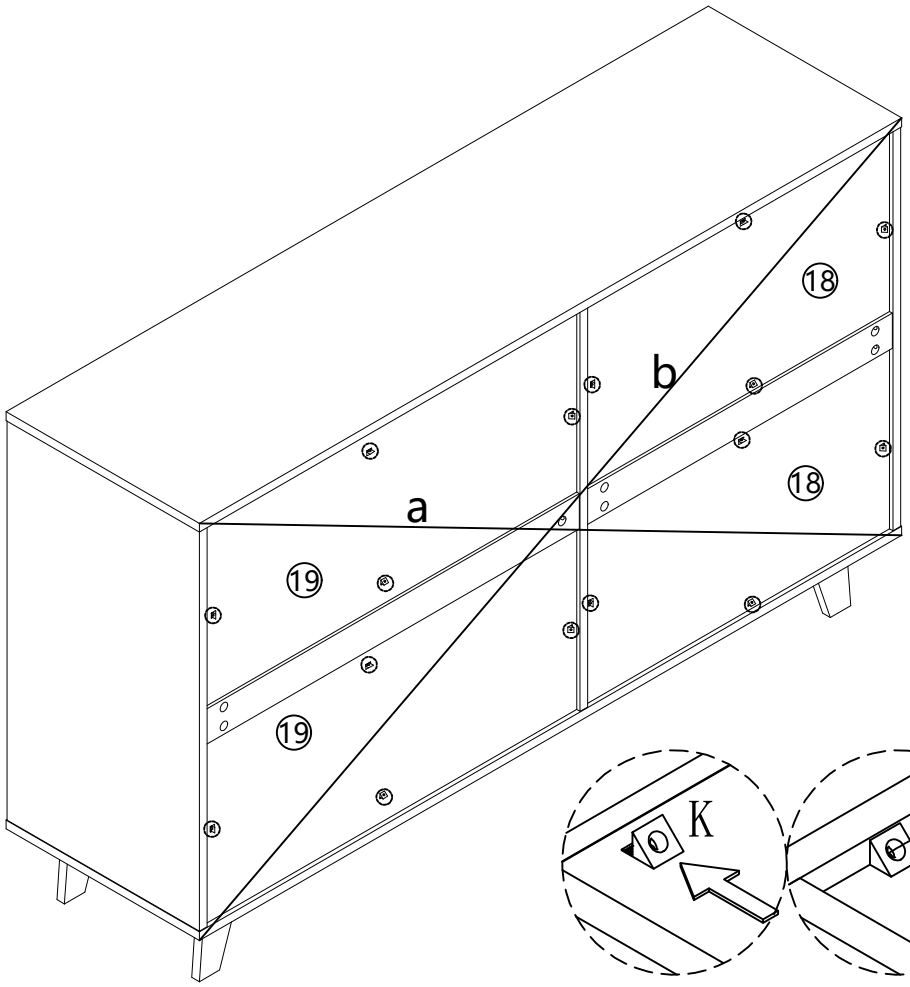

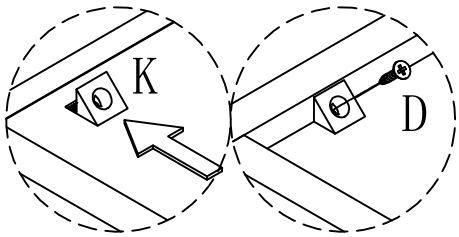

	D X 16
	K X 16

16

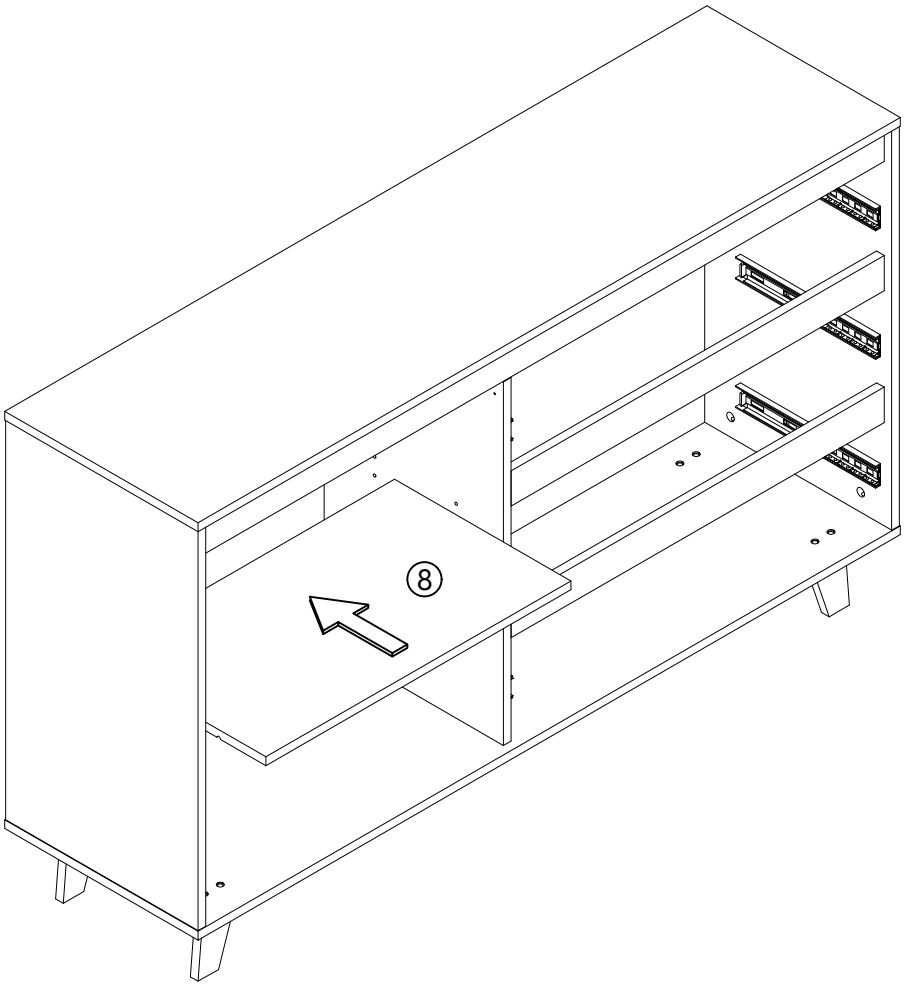

17

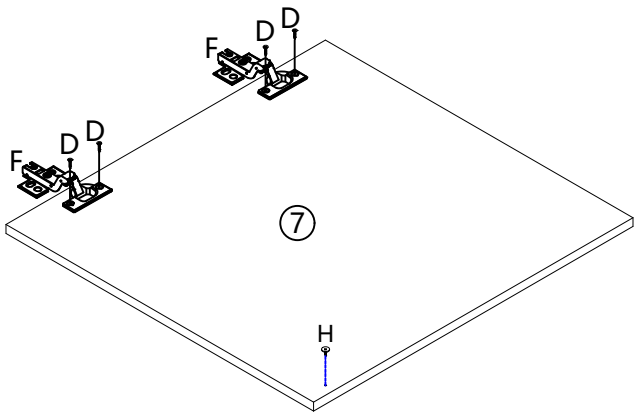

	D X 8
	F X 4
	H X 1

18

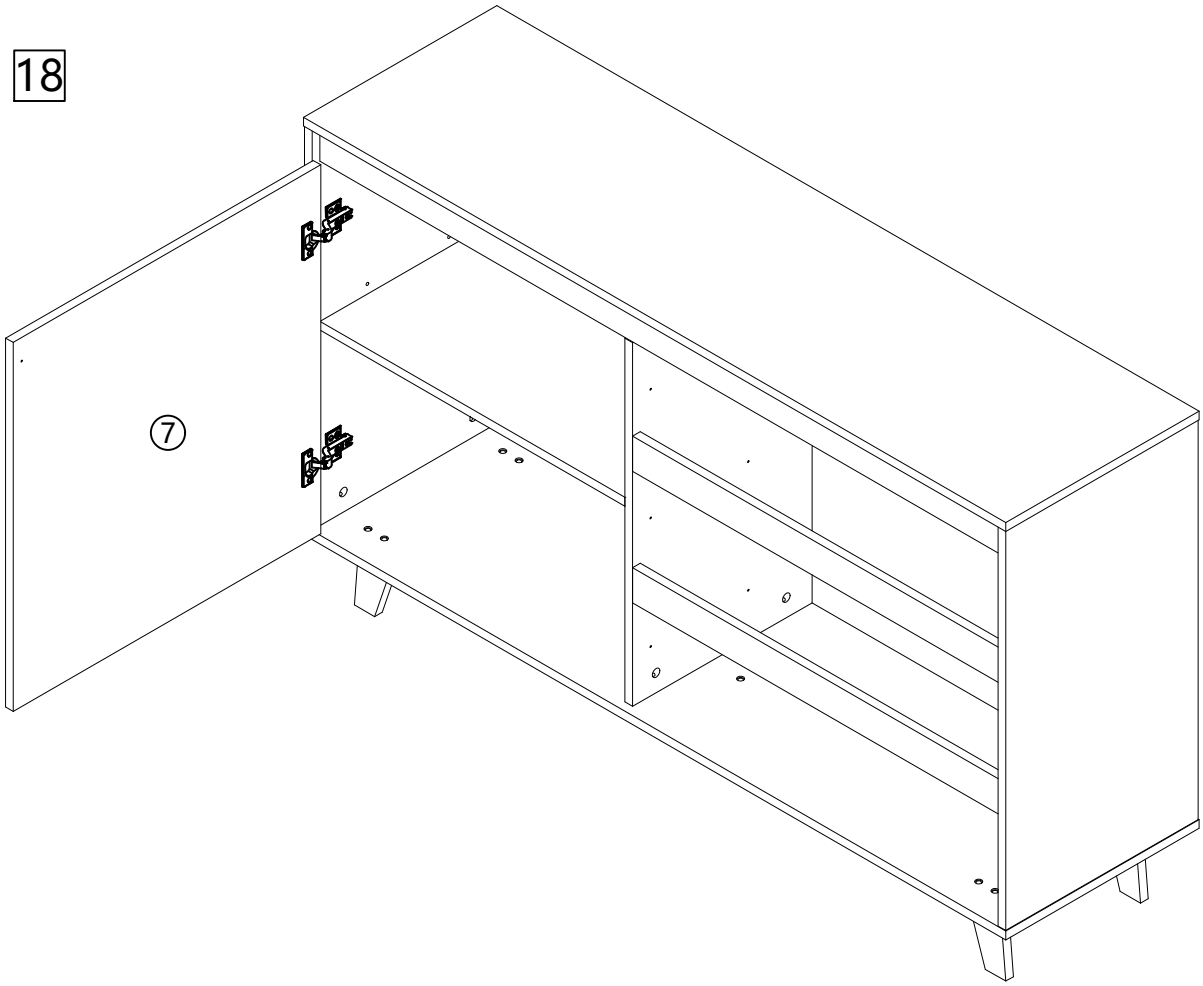

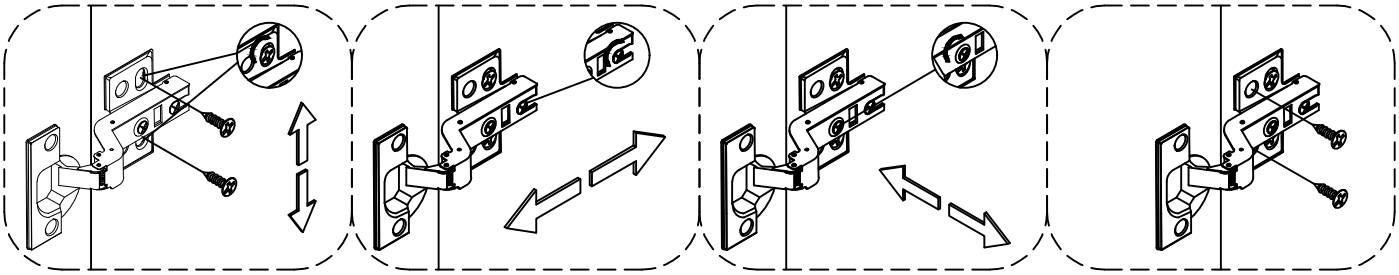

	D X 16

19

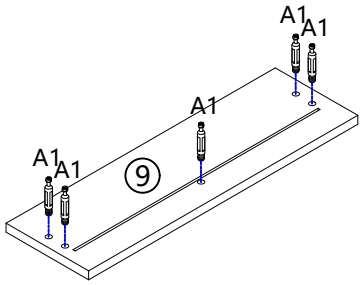

X3

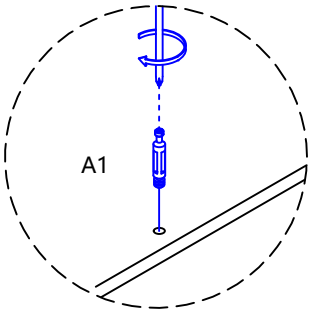

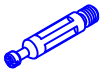

A1 X 5

20

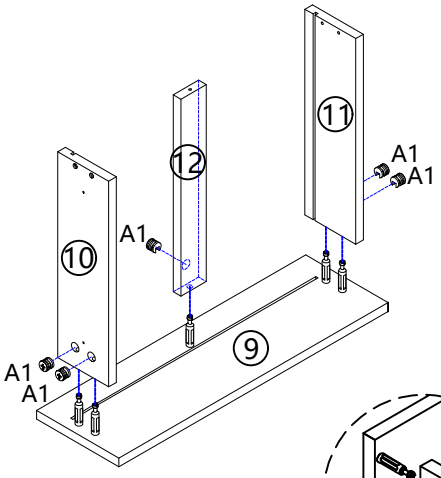

X3

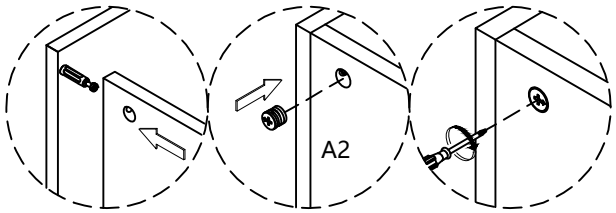

A2 X 15

21

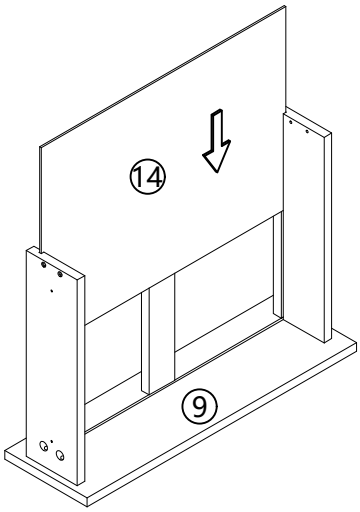

X3

22

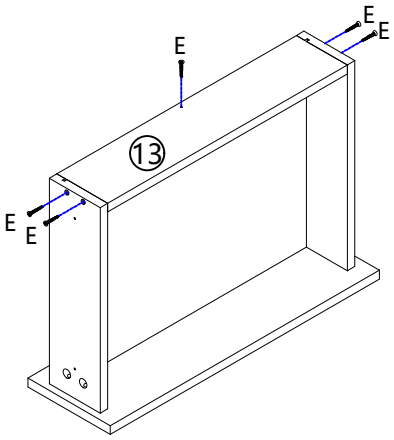

X3

E X 15

23

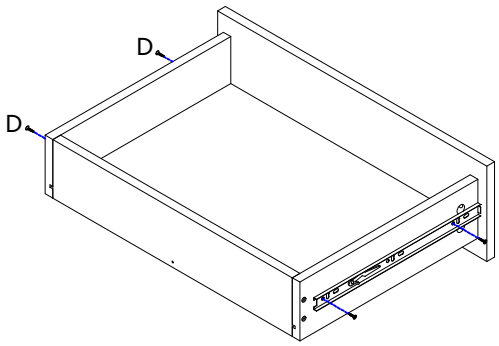

X3

	D X 12
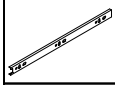	F X 6

24

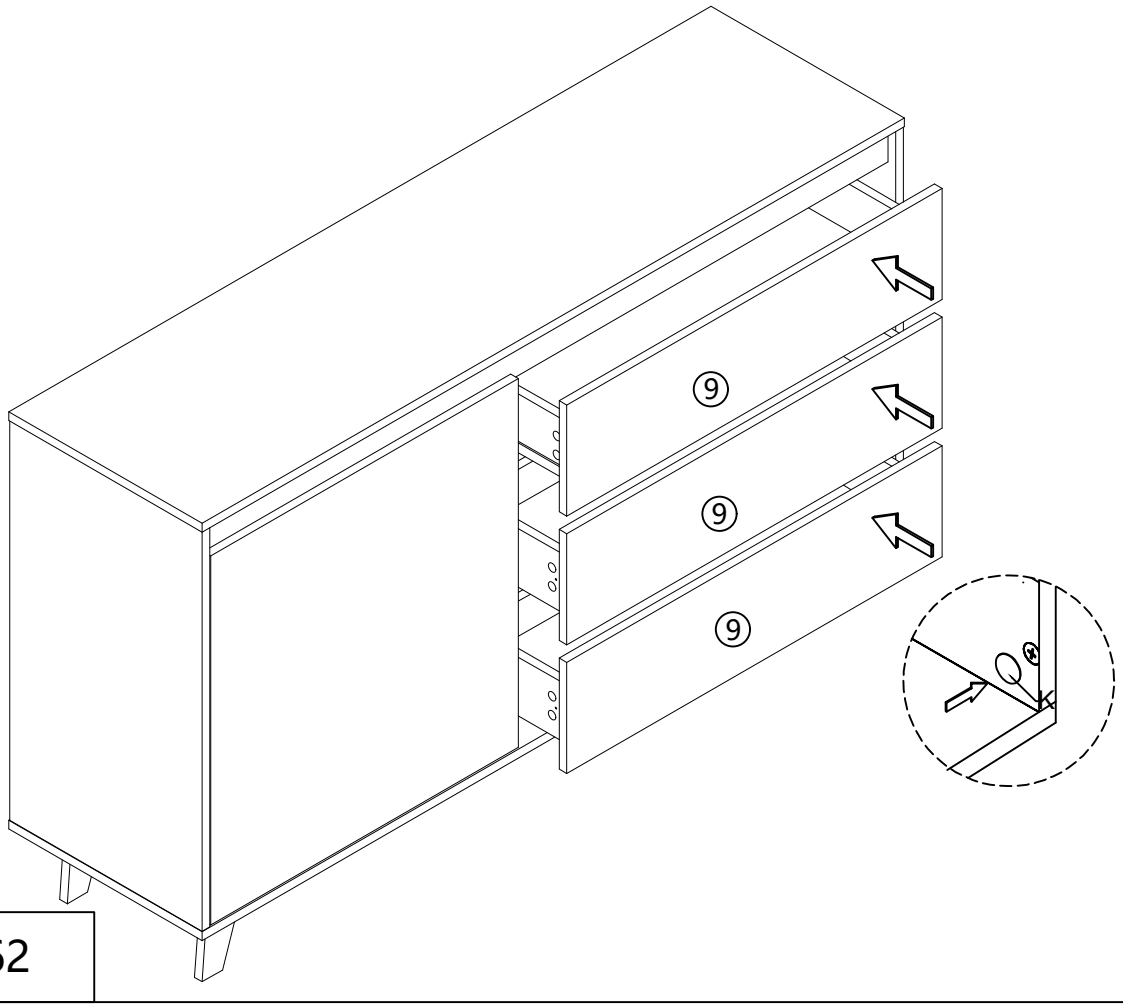

	K X 62

25

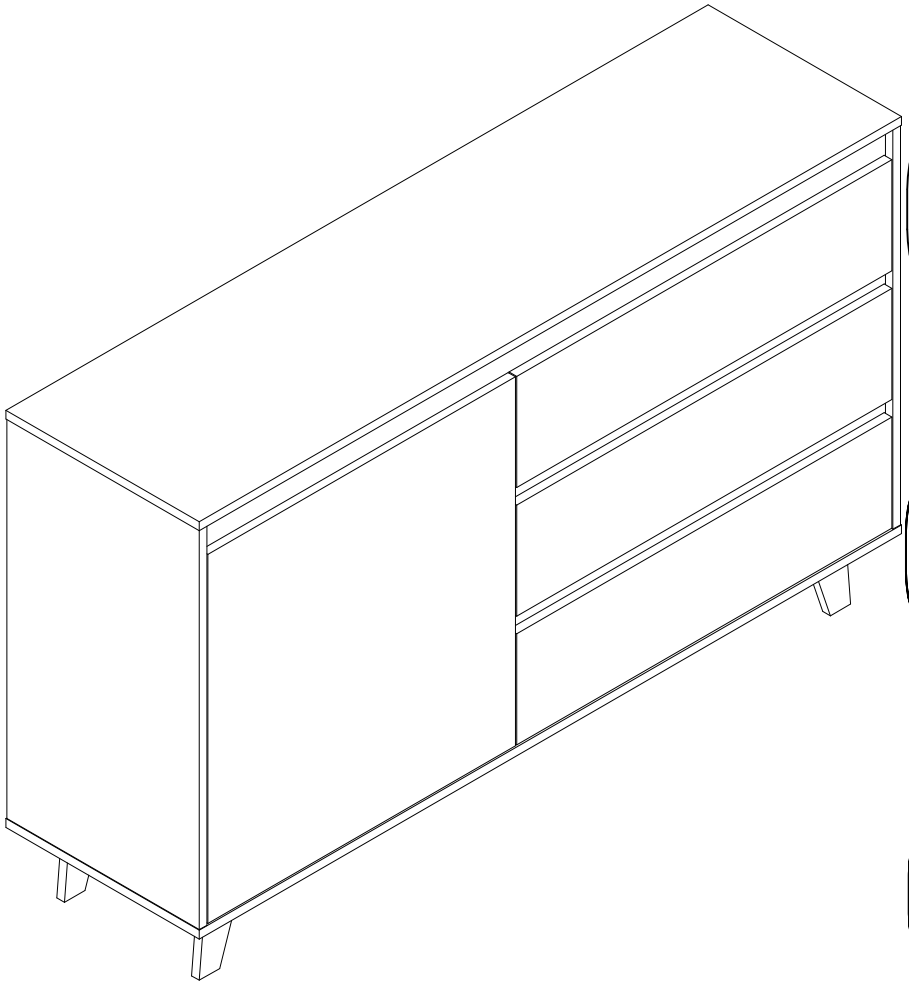

1.

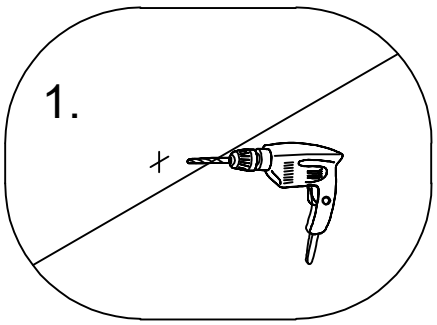

2.

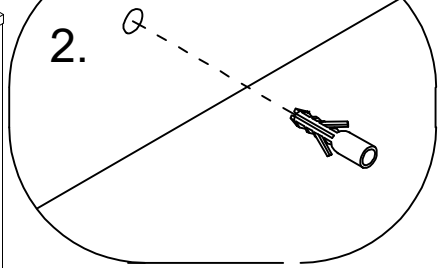

3.

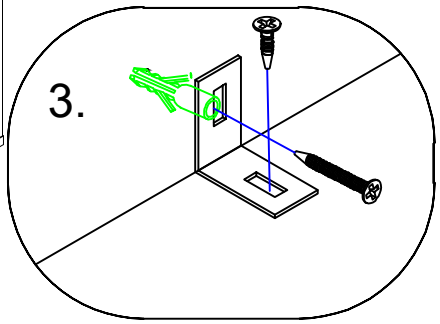

4.

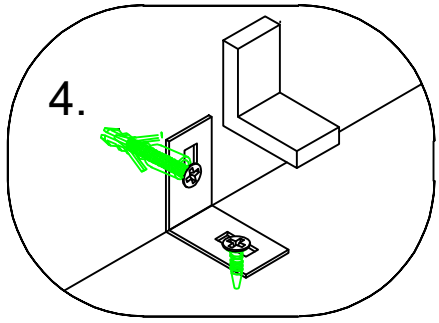

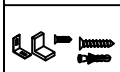	I X 2