133-9

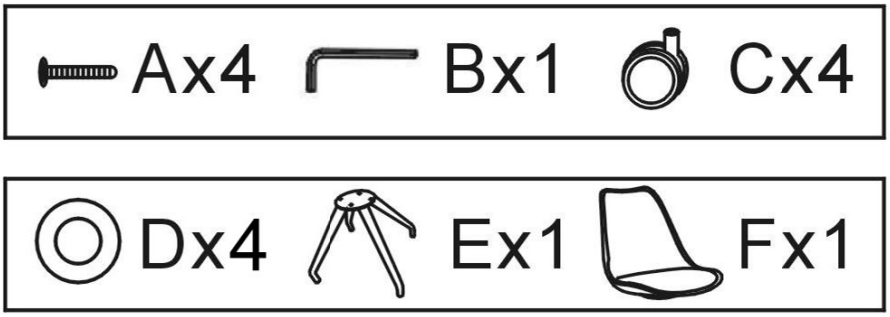

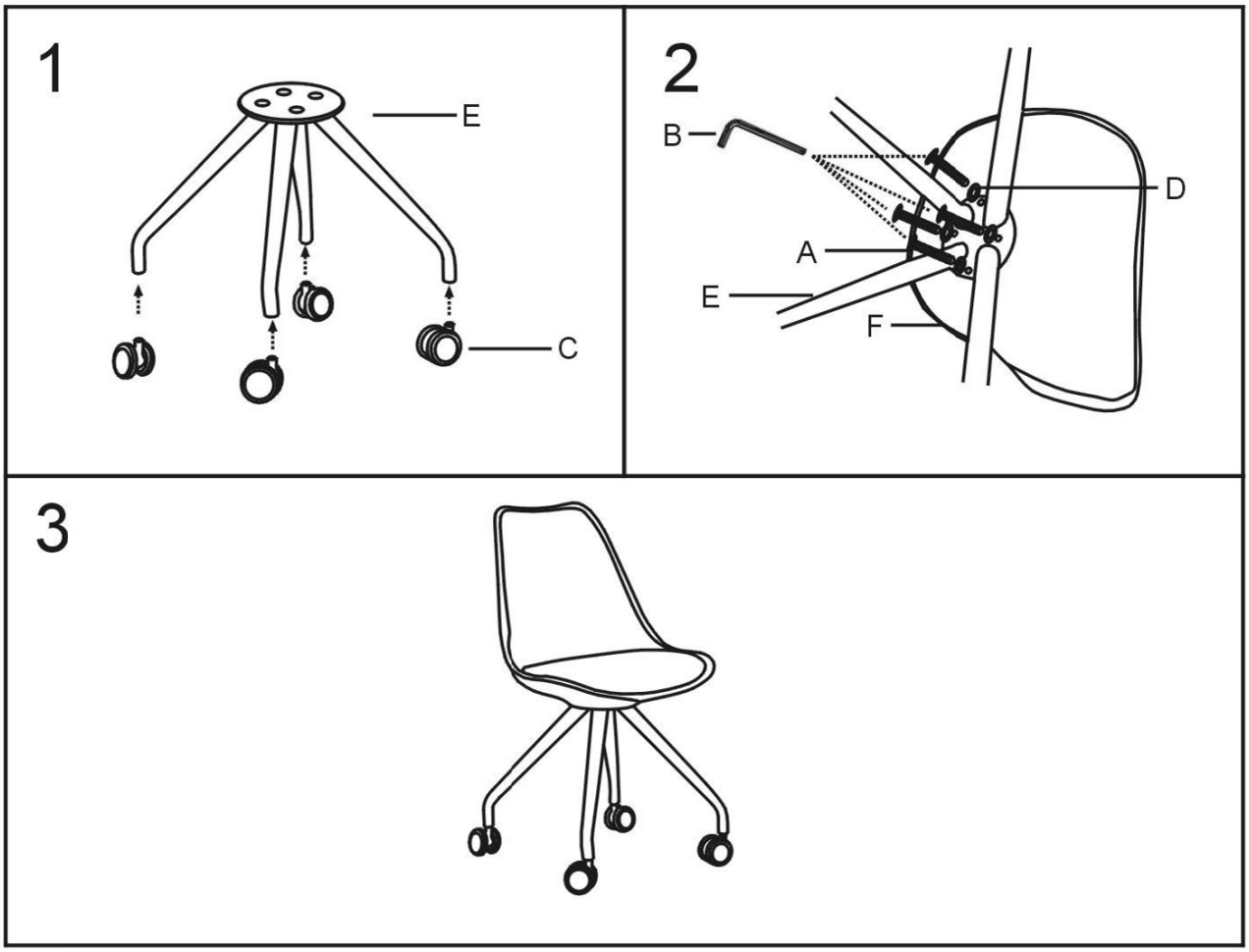

Art.	Spec.
A	M6*16MM
B	6#
C	STANDARD
D	M6*18MM
E	STANDARD