(1)X1

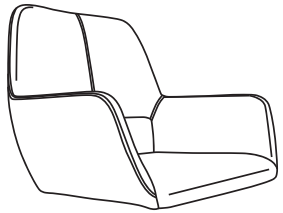

(6)X4

(2)X1

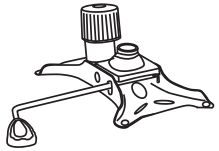

(7)X1

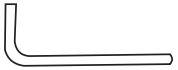

(3)X1

(4)X1

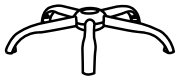

(5)X5

1

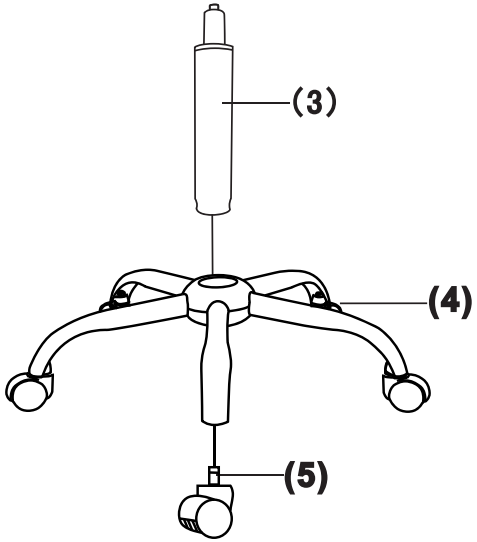

2

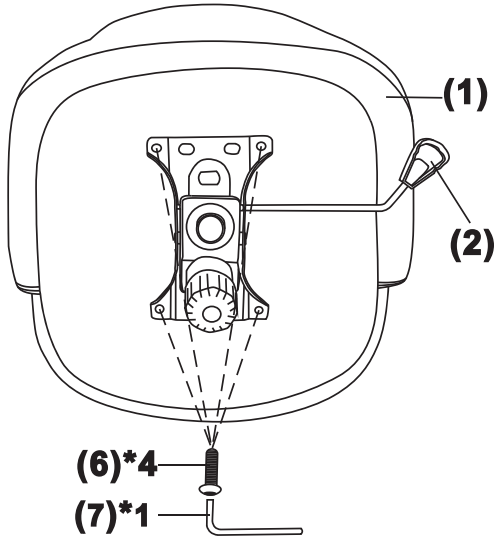

3

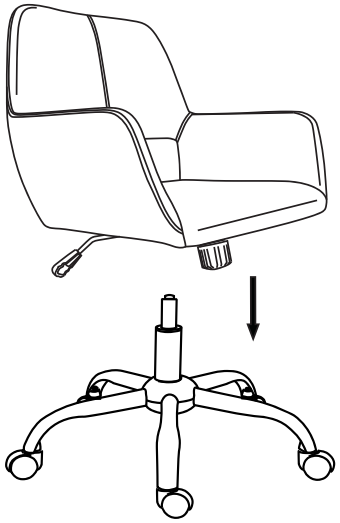

4